Always move further

Single actuator Catalog

VERSION: 2022.2.16

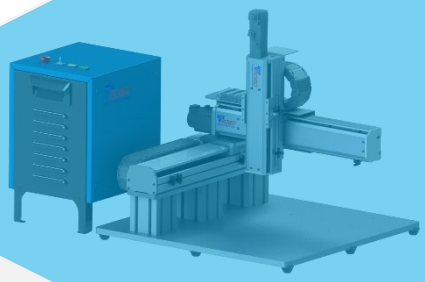

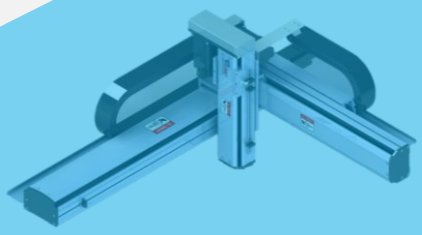

TRI CUONG INDUSTRIAL CO., LTD

CONTENTS

BALL SCREW SINGLE ACTUATORS 3

PRODUCT SELECTION 3

SPECIFICATIONS 4

SPEED AND LOAD GRAPH 5

MOTOR SIZE (SERVO) 7

ORDER INFORMATION 8

MOTOR DIRECTION 9

MOUNTING 10

APPLICATIONS EXAMPLES 11

TS60 MODEL 13

TS60-SN 15

TS60-DN 16

TS60-LN 17

TS60-RN 18

TS80 MODEL 19

TS80-SN 21

TS80-DN 22

TS80-LN 23

TS80-RN 24

TS100 MODEL 25

TS100-SN 27

TS100-DN 28

TS100-LN 29

TS100-RN 30

TS120 MODEL 31

TS120-SN 33

TS120-DN 34

TS120-LN 35

TS120-RN 36

TS140 MODEL 37

TS140-SN 39

TS140-DN 40

TS140-LN 41

TS140-RN 42

BELT SINGLE ACTUATORS 43
PRODUCT SELECTION 43
SPEED AND LOAD GRAPH 44
ORDER INFORMATION 45
MOTOR DIRECTION 46
TSB60 MODEL 47
TSB60-RN 49
TSB60-LN 50
TSB80 MODEL 51
TSB80-RN 53
TSB80-LN 54
MUTIPLE ACTUATORS 55
PRODUTCT SELECTION 55
TM20 MODEL 56
TM20 - A1 58
TM31 MODEL 59
TM31 - A1 61
TM31 - A1 - G 62
TM32 MODEL 63
TM32 - A1 65
TM32 - A1 - G 66
TM33 MODEL 67
TM33 - A1 69
TM33 - A1 - G 70

BALL SCREW SINGLE ACTUATORS

PRODUCT SELECTION

TS 60

- Maximum Stroke 500mm
- Maximum Payload 12kg
- Body With 60mm

TS 80

- Maximum Stroke 800mm
- Maximum Payload 25kg
- Body With 88mm

TS 100

- Maximum Stroke 800mm
- Maximum Payload 35kg
- Body With 100mm

TS 120

- Maximum Stroke 800mm
- Maximum Payload 55kg
- Body With 120mm

TS 140

- Maximum Stroke 1000mm
- Maximum Payload 60kg
- Body With 140mm

SPECIFICATIONS

Model	Width	Screw Lead (mm)	Ball Screw	Max Load (kg)		Max Speed (mm/s)	Max Stroke (mm)	Page No.
				Horizontal	Vertical			
TS60	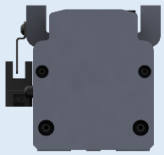 60mm	5	Ø12-C7	10	5	250	500	13
		10		8	3.5	500		
TS80	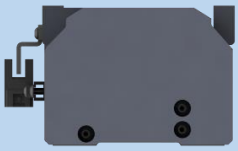 88mm	5	Ø15-C7	25	10	250	800	19
		10		20	8	500		
		20		11	5	1000		
TS100	100mm	5	Ø15-C7	35	16	250	800	25
		10		25	11	500		
		20		14	7	1000		
TS120	120mm	5	Ø15-C7	53	34	250	1000	31
		10		42	28	500		
		20		25	16	1000		
TS140	140mm	5	Ø15-C7	60	40	250	1000	37
		10		50	30	500		
		20		30	20	1000		

◦ **TS60**: The said figures are the reference values prepared based Mitsubishi HG-KN13J (100W) so that they are subject to changes depending on a type of motor used.

◦ **TS80**, **TS100**: The said figures are the reference values prepared based Mitsubishi HG-KN23J (200W) so that they are subject to changes depending on a type of motor used.

◦ **TS120**, **TS140**: The said figures are the reference values prepared based Mitsubishi HG-KN43J (400W) so that they are subject to changes depending on a type of motor used.

SPEED AND LOAD GRAPH

Model	Horizontal	Vertical
TS60	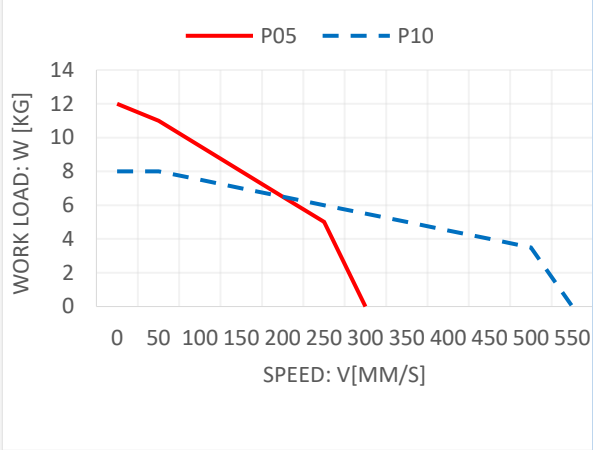	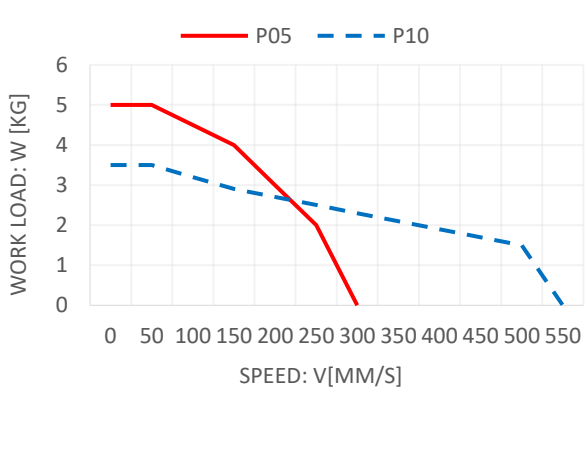
TS80	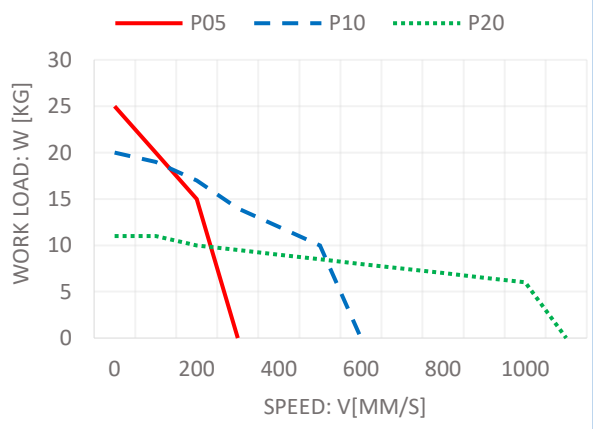	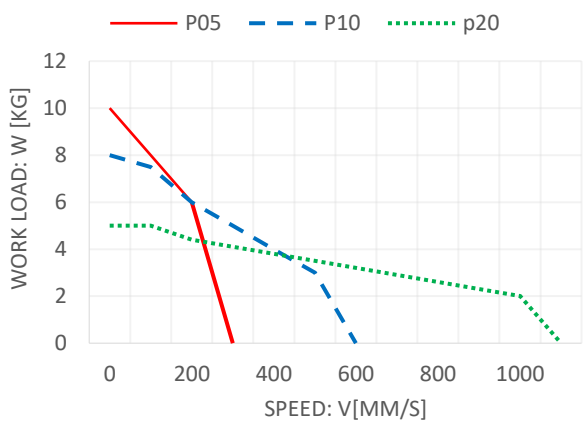
TS100	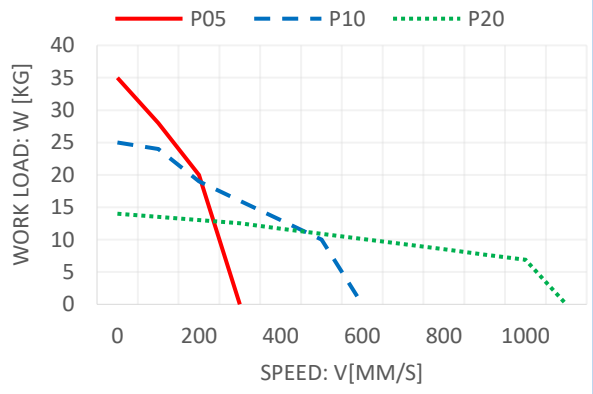	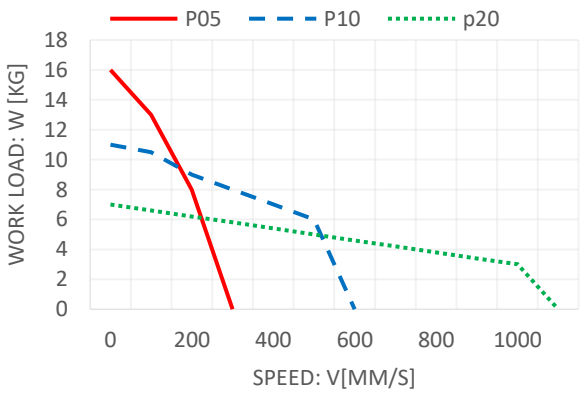

TS120

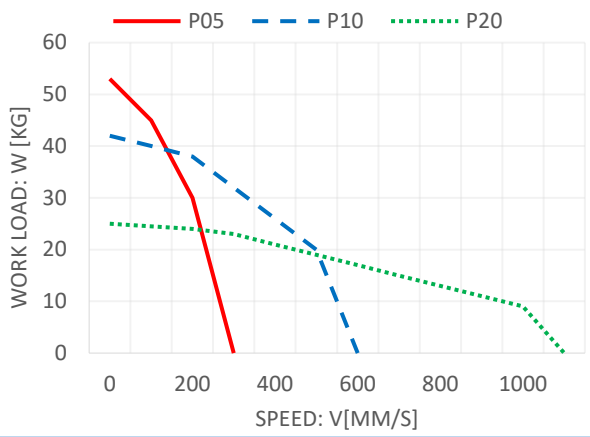

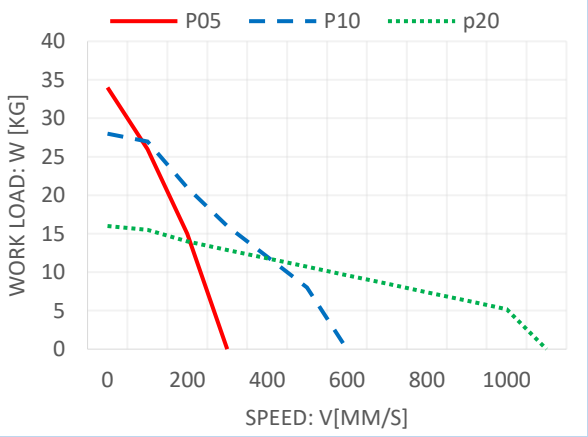

TS140

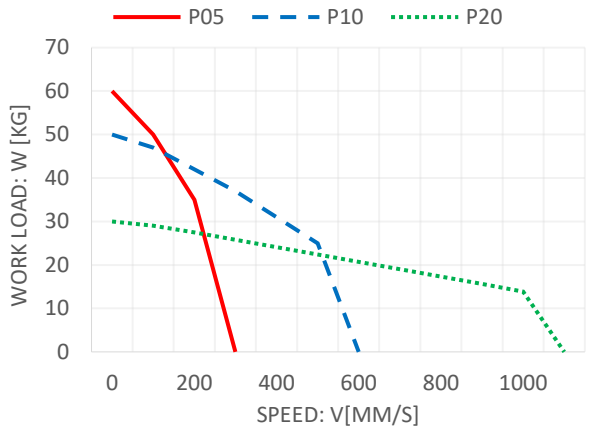

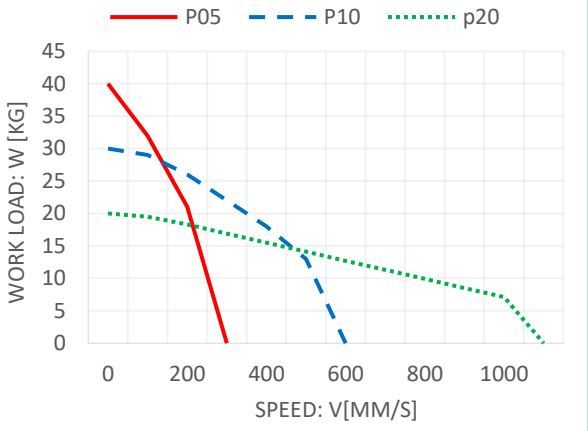

<Note>

The max speed above can vary depending on the travel distance.

Standard accessories include couplings (pulley) motor mounting. (excluding motor, sensor; can be self-provided or quoted separately)

When the stroke is over 750mm, the run-out of the ball screw will occur. We recommend to low down the operating speed under these circumstances.

The acceleration and Deceleration value is set at 0.2s seconds.

MOTOR SIZE (SERVO)

Motor DWG	Motor Size	Motor Shaft	Brand	Model	Motor Power(W)
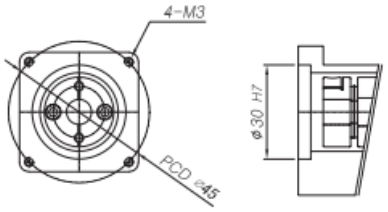	38	Ø8	Panasonic	MSMD-5A/MSMD-01	50W/ 100W
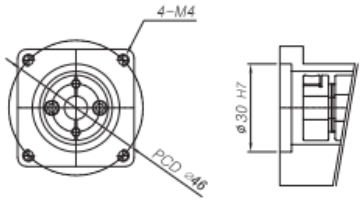	40	Ø8	Mitsubishi Delta	HG-KN13J ECM-B3L-C20401RS1	100W
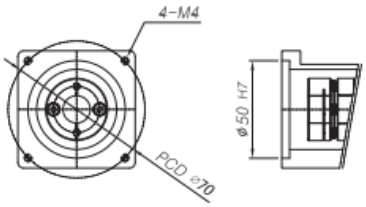	60	Ø11	Panasonic	MSMD-02	200W
		Ø14	Panasonic	MSMD-04	400W
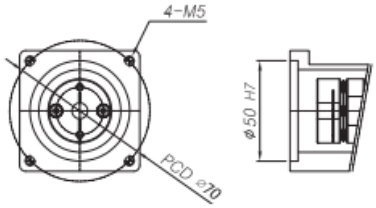	60	Ø14	Mitsubishi Delta	HG-KN23J/ HG-KN43J ECM-B3M-C20602RS1/ ECM-B3M-C20604RS1	200W/ 400W
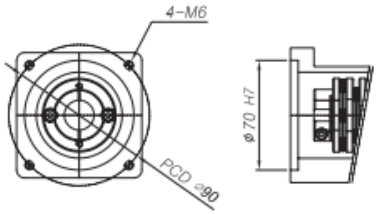	80	Ø19	Mitsubishi Delta	HG-KN73J ECM-B3M-C20807RS1	750W

ORDER INFORMATION

Model	Body Size	Screw lead	Accuracy class	Stroke	Motor direction	Motor	Sensor
(1)	(2)	(3)	(4)	(5)	(6)	(7)	(8)
TS	100	P10	C	S200	SN	M20B	3P

(1) Series	***TS*** *T-Robo Single Actuator*
(2) Body Size	**60, 80, 100, 120, 140**
(3) Pitch	**05** 5mm **10** 10mm **20** 20mm **25** 25mm
(4) Accuracy	**H** High Precision **C** Common Precision
(5) Stroke (interval/50mm)	**50 ~ 500** (mm) **TS60** **50 ~ 800** (mm) **TS80, TS100** **50 ~ 1000** (mm) **TS120, TS140**
(6) Motor direction	**SN** **Straight** motor mount **DN** Reverse motor mount, **Down** type (*Option) **LN** Reverse motor mount, **Left** type **RN** Reverse motor mount, **Right** type
(7) Motor	*(7.1) Motor brand* **M** Mitsubishi **P** Panasonic **D** Delta *(7.2) Motor power* **05** 50W **10** 100W **20** 200W **40** 400W **70** 750W *(7.3) Brake option* **-** No brake **B** With brake
(8) Sensor	*(8.1) Quality* **-** No sensor **1** 1 pcs **2** 2 pcs **3** 3 pcs *(8.2) Output type* **-** NPN **P** PNP

MOTOR DIRECTION

	SN: Straight motor mount.
	DN: Reverse motor mount, Down type. (*Option)
	LN: Reverse motor mount, Left type.
	RN: Reverse motor mount, Right type.

MOUNTING

Mounting	Actuator-Plate A	Actuator-Plate B	Actuator-Plate C
	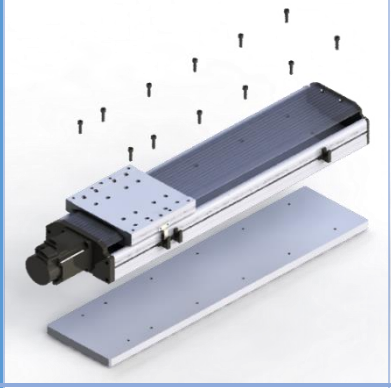	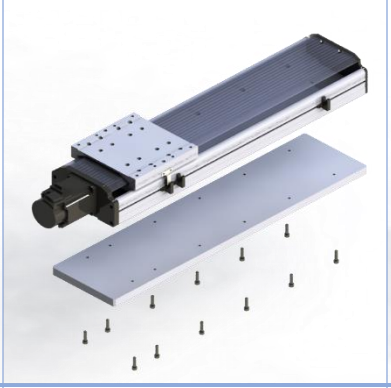	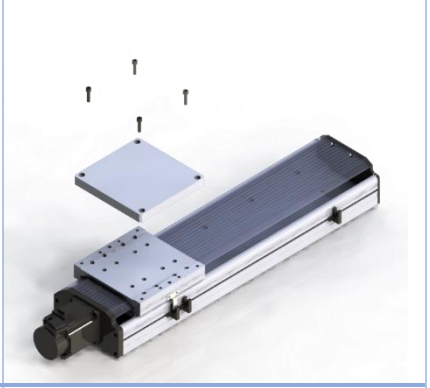
TS60	***M4x16***	***M5x12***	***M5x16***
TS80	***M5x12***	***M6x10***	***M5x16***
TS100	***M5x16***	***M6x12***	***M5x16***
TS120	***M5x20***	***M6x15***	***M5x16***
TS140	***M5x16***	***M6x12***	***M6x16***
**Note: Plate 10mm mounting bolt length.*			

APPLICATIONS EXAMPLES

Spray Printing Device for PCB Substrate Boards

Use specification		
TS120	TS100	TS60

Conveyance Device for Assembly Lines

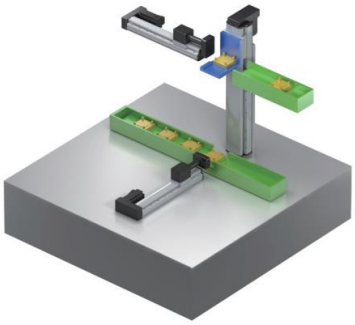

Use specification		
TS100	TS80	TS60

Cutting for Glass Substrate Boards

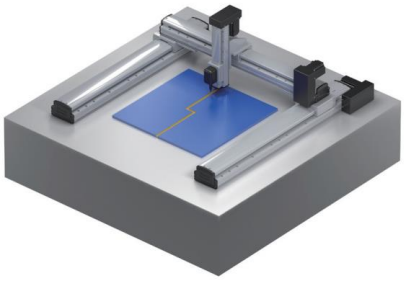

Use specification			
TS120	TS120	TS100	TS60

Pick and Place Device for Small Components

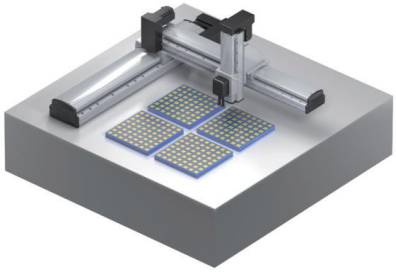

Use specification		
TS140	TS120	TS100

Assembling Device for Small Components

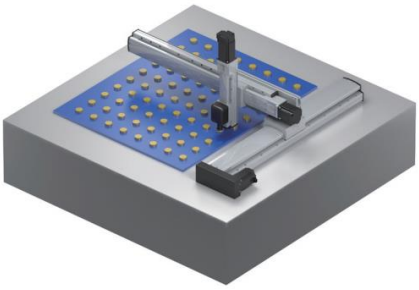

Use specification		
TS120	TS100	TS60

IC Printer Device

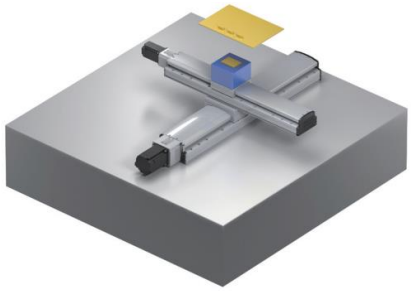

Use specification	
TS140	TS120

Surface Cleaning Device for Circuit Boards

Use specification		
TS140	TS140	TS120

Aligning Device for Pick and Place of IC Boards

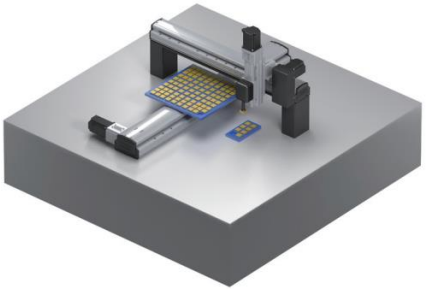

Use specification		
TS120	TS100	TS60

Parts Handling

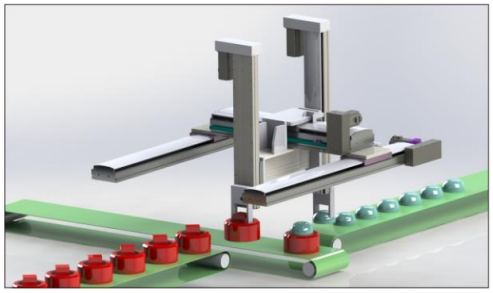

Use specification				
TS120	TS120	TS100	TS80	TS80

Device for Labelling

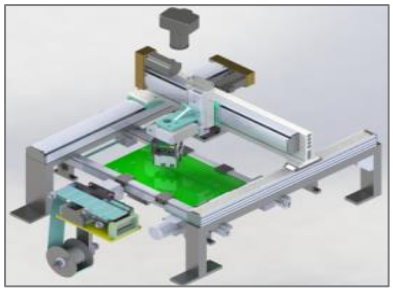

Use specification			
TS120	TS100	TS80	TS60

Flexible positioning and precise dispensing in factory

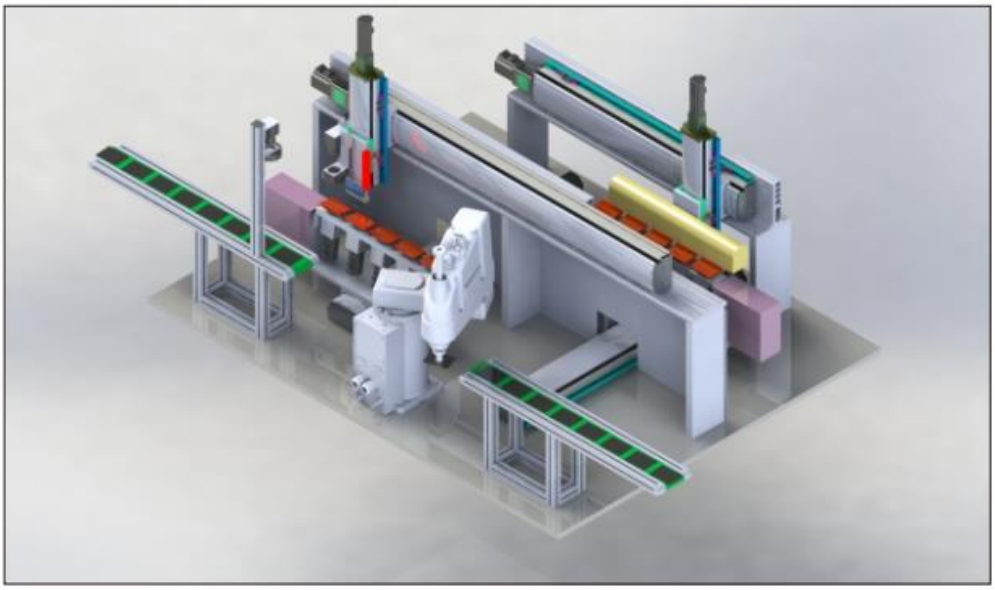

TS60 MODEL

● Motor Direction

SN	DN	LN	RN

● Ordering Method

TS60 - P05 - C - S100 - SN - M10 - 2

Base Style	
60	*Body size 60*

Accuracy Class	
H	*High precision*
C	*Common precision*

Motor type		Power	
M	*Mitsubishi*	05	*50W*
P	*Panasonic*	10	*100W*
D	*Delta*	**Brake**	
		_	*No Brake*
		B	*With Brake*
**For Z: Motor from customer*			

Screw Lead	
05	*5 mm*
10	*10 mm*

Stroke
50-500
interval/50mm

Motor direction	
SN	*Motor Exposed*
DN	*Motor on Lower Side*
LN	*Motor on Left Side*
RN	*Motor on Right Side*

Q'ty Sensor		Sensor Type	
1	*1pcs*	_	*NPN*
2	*2pcs*	P	*PNP*
3	*3pcs*		
_	*No Sensor*		

Example	
Order code	**TS60 - P10 - H - S200 - SN - M10B - 2P**
Description	Single actuator body size 60; Ball screw Lead 10, High precision; Stroke 200mm; Motor Exposed; Motor Mitsubishi 100W with Brake; 2pcs Sensor Type PNP

● Specification

Screw Lead		P05	P10
Ball Screw (C/H)		*Ø12 – C7/ Ø12 – C5*	
Max Speed		*250mm/s [at 3000 rpm]*	*500mm/s [at 3000 rpm]*
Max Load	Horizontal Installation	*12 kg*	*8 kg*
	Vertical Installation	*5 kg*	*3.5 kg*
Repeatability (C/H)		*± 0.01 mm/± 0.005 mm*	
Linear Guider (mm)		W15 - H24 1Rail 1 Block	
Motor Linkage		Coupling	
Sensor Components		Panasonic PM-T65(NPN)	
Motor power AC (W)		100W	

I/O circuit diagram with connector:

NPN:

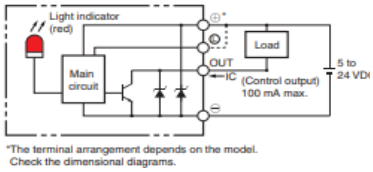

PNP:

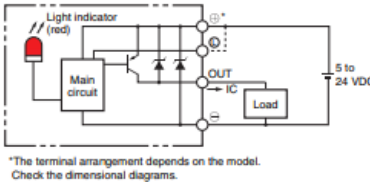

● Max Payload Diameters / Max Static Torque Table

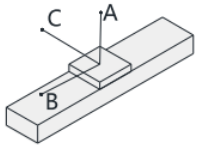

Unit: mm

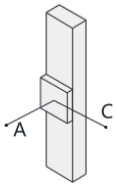

Unit: mm

Horizontal installation		A	B	C
Lead 5	4 kg	495	58	135
	8 kg	215	26	62
Lead 10	3 kg	405	87	180
	7 kg	190	33	75

Vertical installation		A	C
Lead 5	3 kg	56	57
Lead 10	1.5 kg	125	125

Acceleration/Deceleration: $\mathbf{1000mm/s^2}$

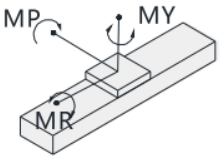

Unit: N.m

Maximum static toque	
MY	22
MP	22
MR	45

TS60-SN

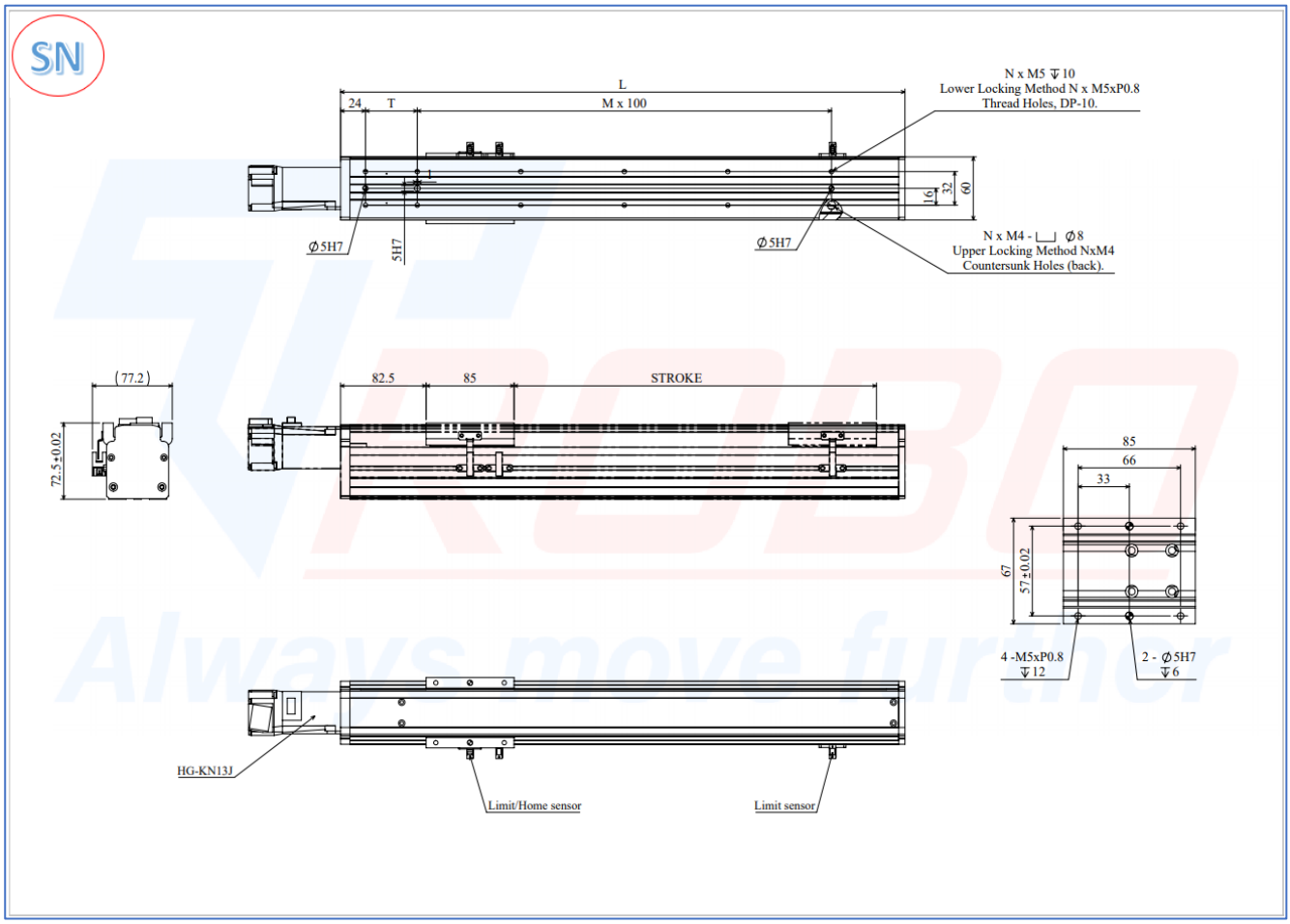

STROKE	50	100	150	200	250	300	350	400	450	500
L	245	295	345	395	445	495	545	595	645	695
M	1	1	2	2	3	3	4	4	5	5
N	6	6	8	8	10	10	12	12	14	14
T	50	100	50	100	50	100	50	100	50	100
Mass (Kg)	**2.20**	**2.60**	**3.00**	**3.40**	**3.80**	**4.20**	**4.60**	**5.0**	**5.40**	**5.80**

Unit： mm Mass without motor (±10%).

(*) Specification subject to change without notices.

TS60-DN

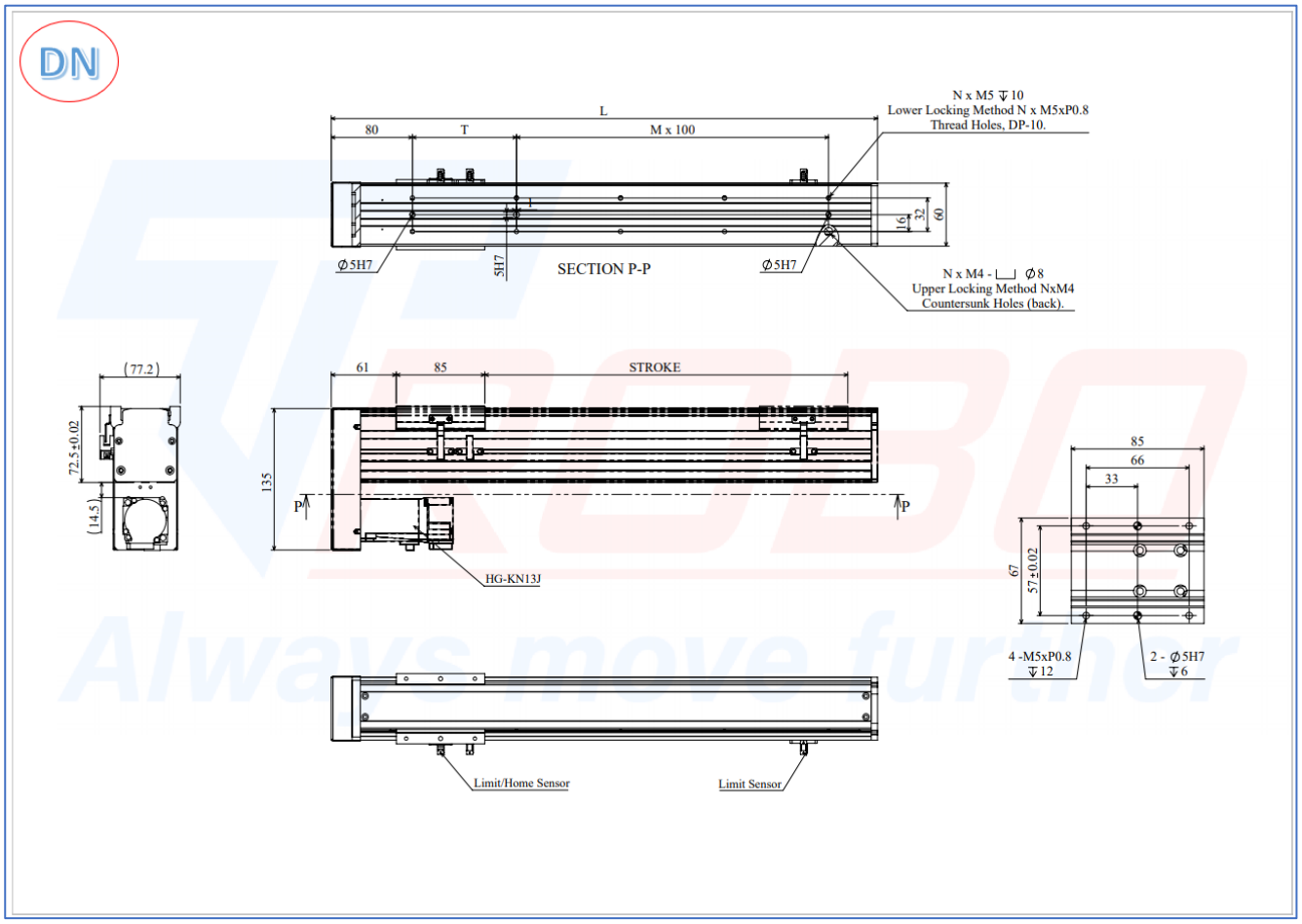

STROKE	200	250	300	350	400	450	500
L	372	422	472	522	572	622	672
M	2	2	3	3	4	4	5
N	8	8	10	10	12	12	14
T	50	100	50	100	50	100	50
Mass (Kg)	**3.60**	**4.0**	**4.40**	**4.80**	**5.20**	**5.60**	**6.00**

Unit： mm Mass without motor (±10%).

(*) Specification subject to change without notices.

TS60-LN

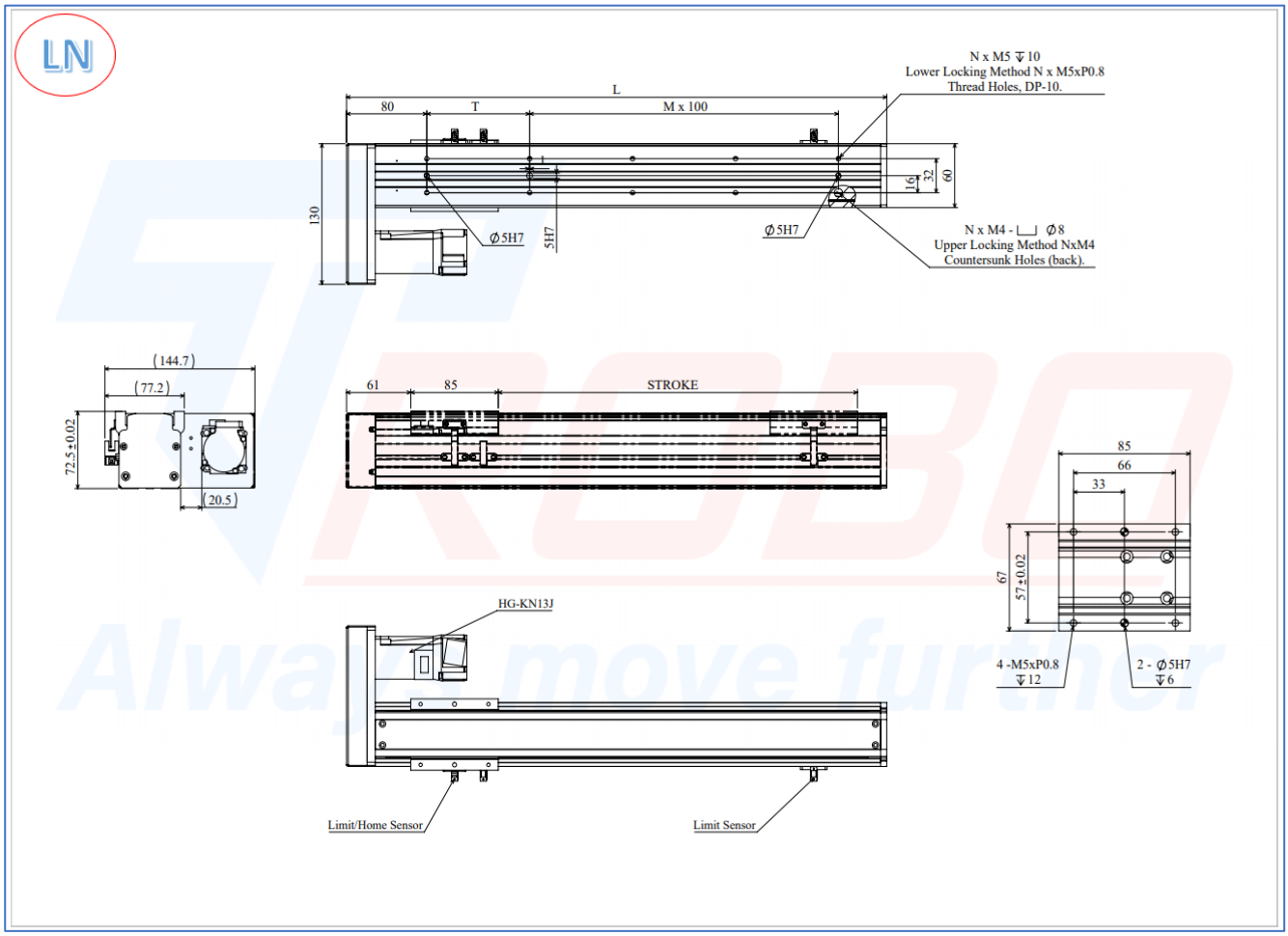

STROKE	50	100	150	200	250	300	350	400	450	500
L	222	272	322	372	422	472	522	572	622	672
M	0.5	1	1	2	2	3	3	4	4	5
N	6	6	6	8	8	10	10	12	12	14
T	50	50	100	50	100	50	100	50	100	50
Mass (Kg)	**2.40**	**2.80**	**3.20**	**3.60**	**4.0**	**4.40**	**4.80**	**5.20**	**5.60**	**6.00**

Unit： mm Mass without motor (±10%).

(*) Specification subject to change without notices.

TS60-RN

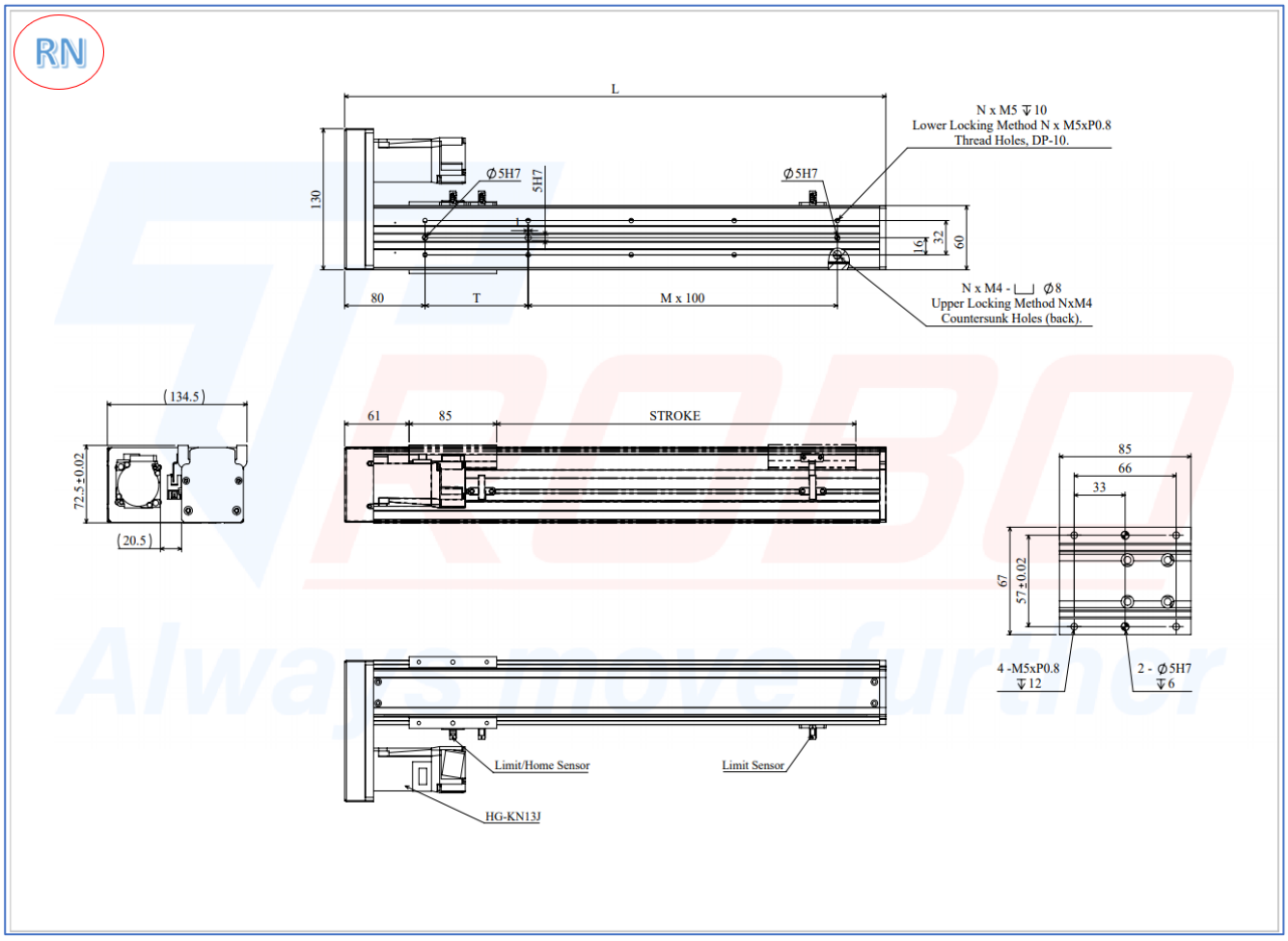

STROKE	50	100	150	200	250	300	350	400	450	500
L	222	272	322	372	422	472	522	572	622	672
M	0.5	1	1	2	2	3	3	4	4	5
N	6	6	6	8	8	10	10	12	12	14
T	50	50	100	50	100	50	100	50	100	50
Mass (Kg)	**2.40**	**2.80**	**3.20**	**3.60**	**4.0**	**4.40**	**4.80**	**5.20**	**5.60**	**6.00**

Unit： mm Mass without motor (±10%).

(*) Specification subject to change without notices.

TS80 model

● Motor Direction

SN	DN	LN	RN

● Ordering Method

TS80 - P05 - C - S100 - SN - M10 - 2

Base Style	
80	*Body size 80*

Accuracy Class	
H	*High precision*
C	*Common precision*

Screw Lead	
05	*05 mm*
10	*10 mm*
20	*20 mm*

Stroke
50-800
interval/50mm

Motor type		Power	
M	*Mitsubishi*	10	*100W*
P	*Panasonic*	20	*200W*
D	*Delta*	Brake	
		_	*No Brake*
		B	*With Brake*
**For Z: Motor from customer*			

Motor direction	
SN	*Motor Exposed*
DN	*Motor on Lower Side*
LN	*Motor on Left Side*
RN	*Motor on Right Side*

Q'ty Sensor		Sensor Type	
1	*1pcs*	_	*NPN*
2	*2pcs*	P	*PNP*
3	*3pcs*		
_	*No Sensor*		

Example	
Order code	**TS80 - P10 - H - S200 - SN - M10B - 2P**
Description	Single actuator body size 80; Ball screw Lead 10, High precision; Stroke 200mm; Motor Exposed; Motor Mitsubishi 100W with Brake; 2pcs Sensor Type PNP

● Specification

Screw Lead		P05	P10	P20
Ball Screw (C/H)		*Ø15 – C7/Ø15 – C5*		
Max Speed		*250mm/s [at 3000 rpm]*	*500mm/s [at 3000 rpm]*	*1000mm/s [at 3000 rpm]*
Max Load	Horizontal Installation	*25 kg*	*20 kg*	*11 kg*
	Vertical Installation	*10 kg*	*8 kg*	*5 kg*
Repeatability (C/H)		*± 0.01 mm/± 0.005 mm*		
Linear Guider (mm)		W15 - H24 1Rail 1 Block		
Motor Linkage		Coupling		
Sensor Components		Panasonic PM-T65(NPN)		
Motor power AC (W)		200W		

I/O circuit diagram with connector:

NPN:

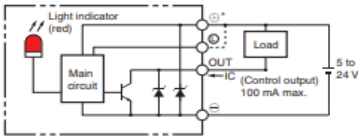

*The terminal arrangement depends on the model. Check the dimensional diagrams.

PNP:

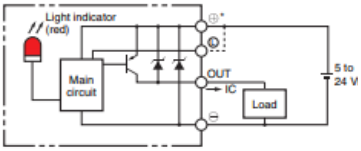

*The terminal arrangement depends on the model. Check the dimensional diagrams.

● Max Payload Diameters / Max Static Torque Table

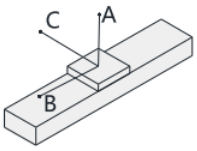

Unit: mm

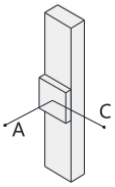

Unit: mm

Horizontal installation		A	B	C	Vertical installation		A	C
Lead 5	15 kg	375	33	100	Lead 5	4 kg	150	165
	25 kg	150	0	20		8 kg	23	26
Lead 10	9 kg	270	40	120	Lead 10	3 kg	250	270
	20 kg	50	5	5		7 kg	70	72
Lead 20	6 kg	156	55	93	Lead 20	2 kg	195	210
	10 kg	87	30	52		5 kg	20	23

Acceleration/Deceleration: $1000mm/s^2$

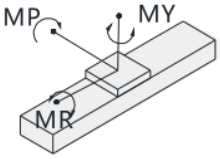

Unit: N.m

Maximum static toque	
MY	43
MP	45
MR	75

TS80-SN

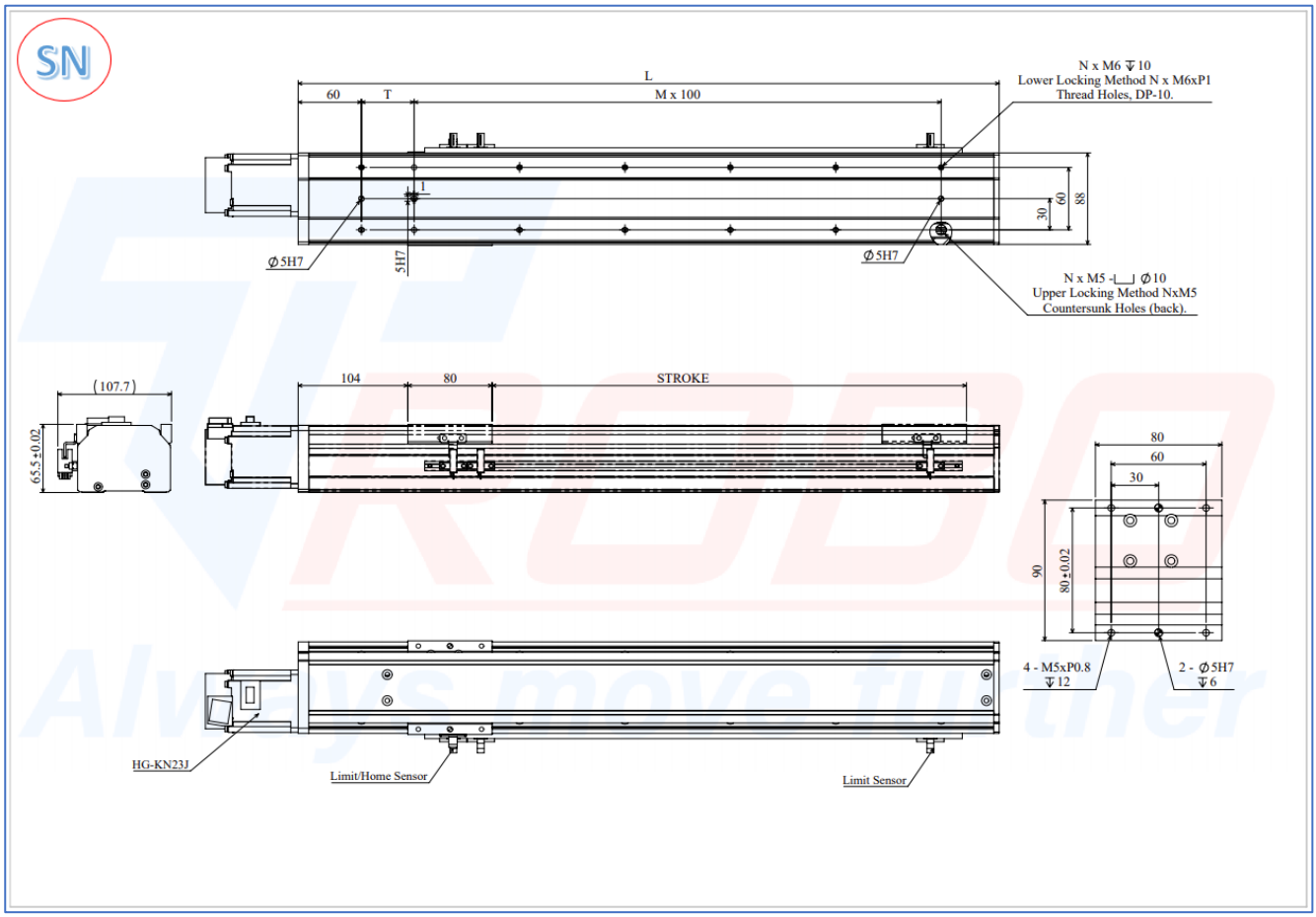

STROKE	50	100	150	200	250	300	350	400	450	500	550	600	650	700	750	800
L	265	315	365	415	465	515	565	615	665	715	765	815	865	915	965	1015
M	1	1	2	2	3	3	4	4	5	5	6	6	7	7	8	8
N	6	6	8	8	10	10	12	12	14	14	16	16	18	18	20	20
T	50	100	50	100	50	100	50	100	50	100	50	100	50	100	50	100
Mass (Kg)	**2.5**	**3.00**	**3.50**	**4.00**	**4.50**	**5.00**	**5.50**	**6.00**	**6.50**	**7.00**	**7.50**	**8.00**	**8.50**	**9.00**	**9.50**	**10.0**

Unit： mm Mass without motor (±10%).

(*) Specification subject to change without notices.

TS80-DN

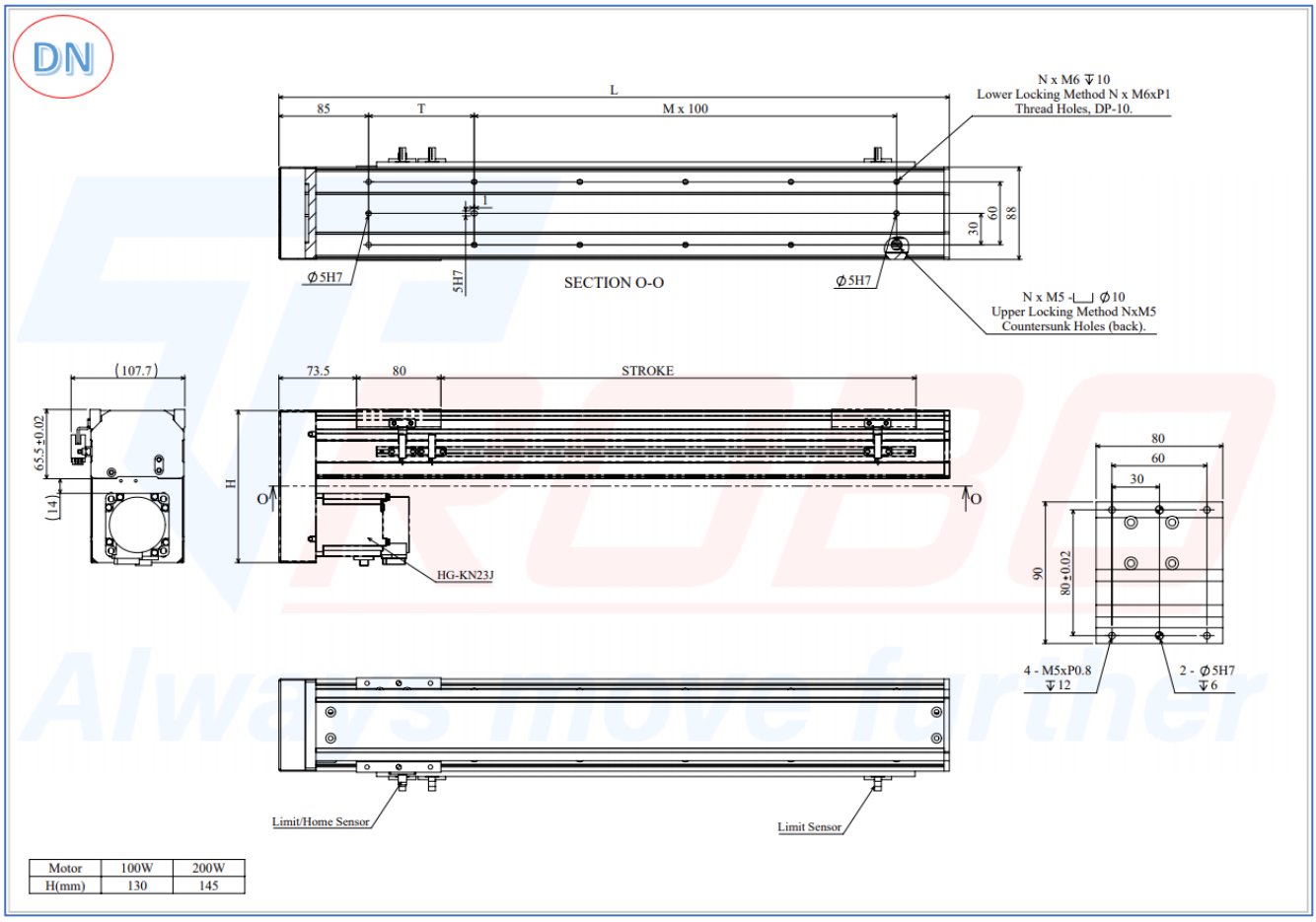

Motor	100W	200W
H(mm)	130	145

STROKE	200	250	300	350	400	450	500	550	600	650	700	750	800
L	385	435	485	535	585	635	685	735	785	835	885	935	985
M	2	2	3	3	4	4	5	5	6	6	7	7	8
N	8	8	10	10	12	12	14	14	16	16	18	18	20
T	50	100	50	100	50	100	50	100	50	100	50	100	50
Mass (Kg)	**4.10**	**4.60**	**5.10**	**5.60**	**6.10**	**6.60**	**7.10**	**7.60**	**8.10**	**8.60**	**9.10**	**9.60**	**10.1**

Unit： mm Mass without motor (±10%).

(*) Specification subject to change without notices.

TS80-LN

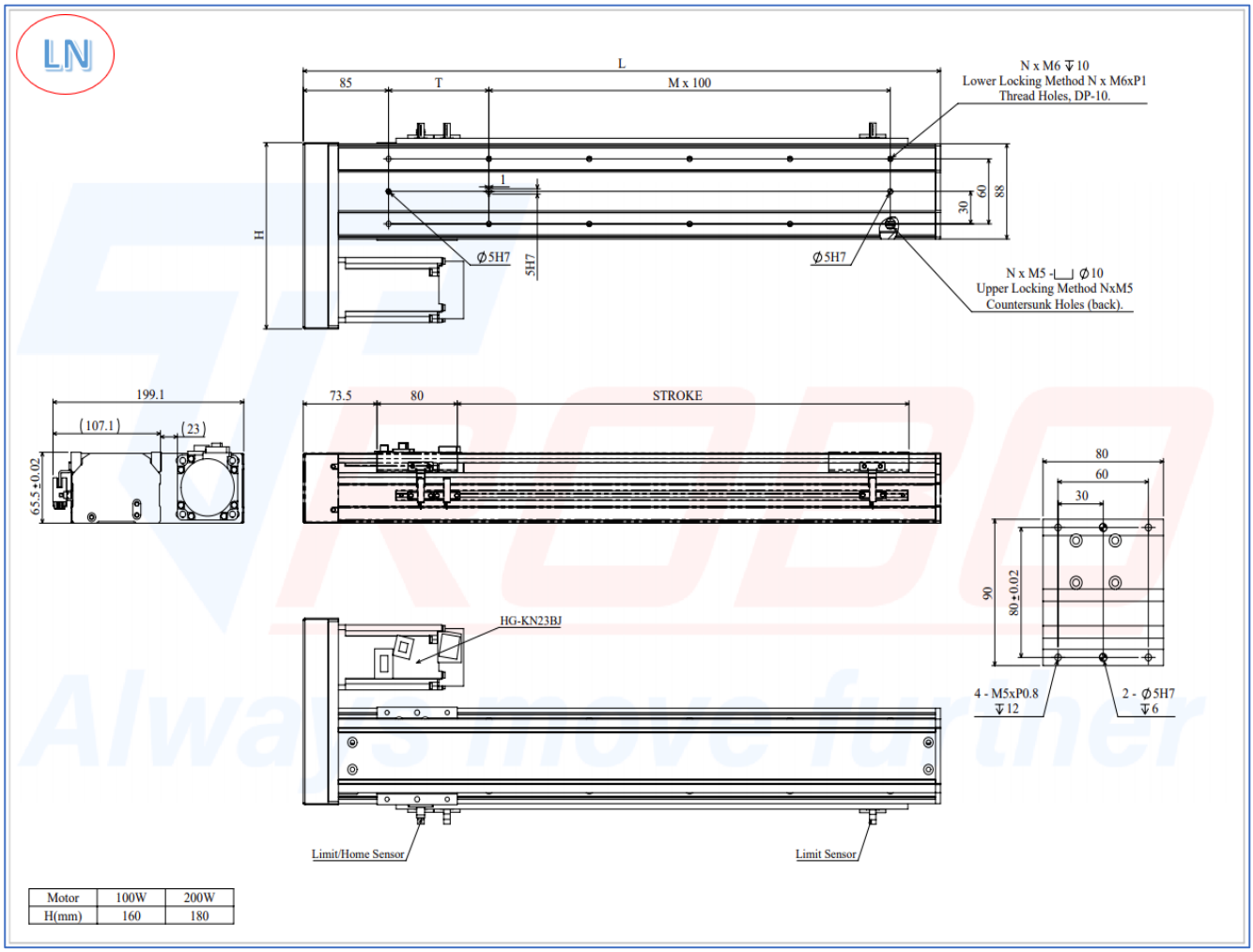

Motor	100W	200W
H(mm)	160	180

STROKE	50	100	150	200	250	300	350	400	450	500	550	600	650	700	750	800
L	235	285	335	385	435	485	535	585	635	685	735	785	835	885	935	985
M	0.5	1	1	2	2	3	3	4	4	5	5	6	6	7	7	8
N	6	6	6	8	8	10	10	12	12	14	14	16	16	18	18	20
T	50	50	100	50	100	50	100	50	100	50	100	50	100	50	100	50
Mass (Kg)	**2.60**	**3.10**	**3.60**	**4.10**	**4.60**	**5.10**	**5.60**	**6.10**	**6.60**	**7.10**	**7.60**	**8.10**	**8.60**	**9.10**	**9.60**	**10.1**

Unit： mm Mass without motor (±10%).

(*) Specification subject to change without notices.

TS80-RN

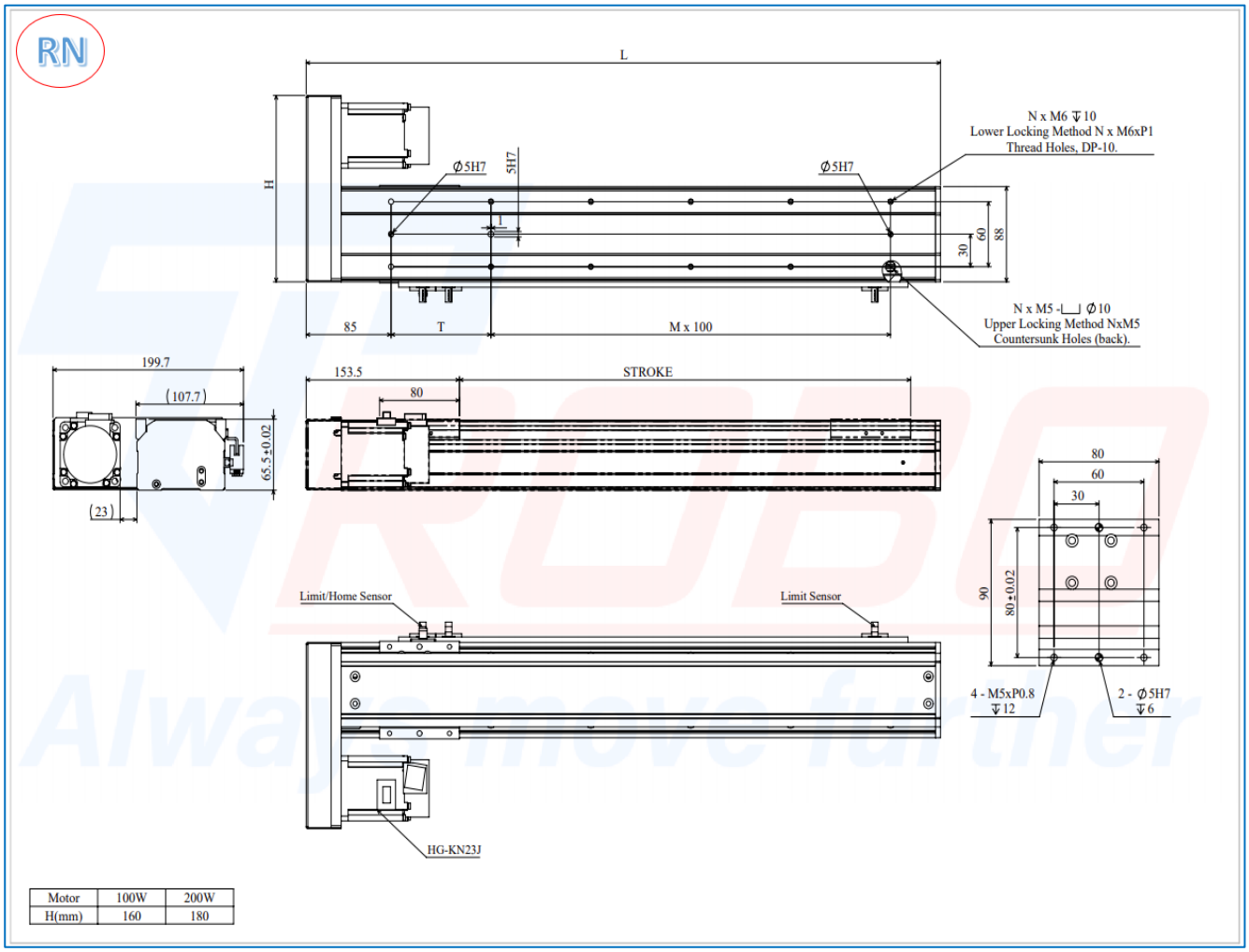

Motor	100W	200W
H(mm)	160	180

STROKE	50	100	150	200	250	300	350	400	450	500	550	600	650	700	750	800
L	235	285	335	385	435	485	535	585	635	685	735	785	835	885	935	985
M	0.5	1	1	2	2	3	3	4	4	5	5	6	6	7	7	8
N	6	6	6	8	8	10	10	12	12	14	14	16	16	18	18	20
T	50	50	100	50	100	50	100	50	100	50	100	50	100	50	100	50
Mass (Kg)	**2.60**	**3.10**	**3.60**	**4.10**	**4.60**	**5.10**	**5.60**	**6.10**	**6.60**	**7.10**	**7.60**	**8.10**	**8.60**	**9.10**	**9.60**	**10.1**

Unit： mm Mass without motor (±10%).

(*) Specification subject to change without notices.

TS100 model

● Motor Direction

SN	**DN**	**LN**	**RN**

● Ordering Method

TS100 - P05 - C - S350 - SN - M20B - 3

Base Style	
100	*Body size 100*

Accuracy Class	
H	*High precision*
C	*Common precision*

Screw Lead	
05	*05 mm*
10	*10 mm*
20	*20 mm*

Stroke
50-800
interval/50mm

Motor type		Power	
M	*Mitsubishi*	10	*100W*
P	*Panasonic*	20	*200W*
D	*Delta*	40	*400W*
**For Z: Motor from customer*		**Brake**	
		_	*No Brake*
		B	*With Brake*

Motor direction	
SN	*Motor Exposed*
DN	*Motor on Lower Side*
LN	*Motor on Left Side*
RN	*Motor on Right Side*

Q'ty Sensor		Sensor Type	
1	*1pcs*	_	*NPN*
2	*2pcs*	P	*PNP*
3	*3pcs*		
_	*No Sensor*		

Example	
Order code	**TS100 - P10 - C - S400 - SN - D40**
Description	Single actuator body size 100; Ball screw Lead 10, Common precision; Stroke 400mm; Motor Exposed; Motor Delta 400W; No Sensor

● Specification

Screw Lead		P05	P10	P20
Ball Screw (C/H)		*Ø15 – C7/ Ø15 – C5*		
Max Speed		*250mm/s [at 3000 rpm]*	*500mm/s [at 3000 rpm]*	*1000mm/s [at 3000 rpm]*
Max Load	Horizontal Installation	*35 kg*	*25 kg*	*14 kg*
	Vertical Installation	*16 kg*	*11 kg*	*7 kg*
Repeatability (C/H)		*± 0.01 mm/± 0.005 mm*		
Linear Guider (mm)		W12 – H13 2Rail 4Block		
Motor Linkage		Coupling		
Sensor Components		Panasonic PM-T65(NPN)		
Motor power AC (W)		200W		

I/O circuit diagram with connector:

NPN:

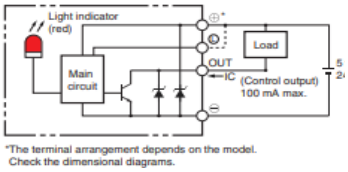

PNP:

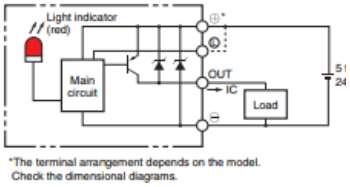

● Max Payload Diameters / Max Static Torque Table

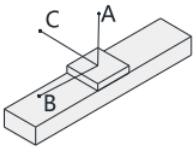

Unit: mm

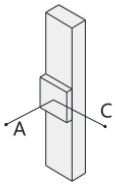

Unit: mm

Horizontal installation		A	B	C	Vertical installation		A	C
Lead 5	20 kg	415	24	25	Lead 5	5 kg	100	145
	30 kg	98	66	68		12 kg	50	90
Lead 10	10 kg	390	76	79	Lead 10	4 kg	125	180
	25 kg	120	22	25		10 kg	75	90
Lead 20	5 kg	425	220	205	Lead 20	2 kg	14	200
	14 kg	95	22	24		5 kg	45	85

Acceleration/Deceleration: $\mathbf{1000mm/s^2}$

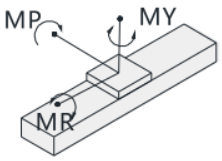

Unit: N.m

Maximum static toque	
MY	95
MP	95
MR	115

TS100-SN

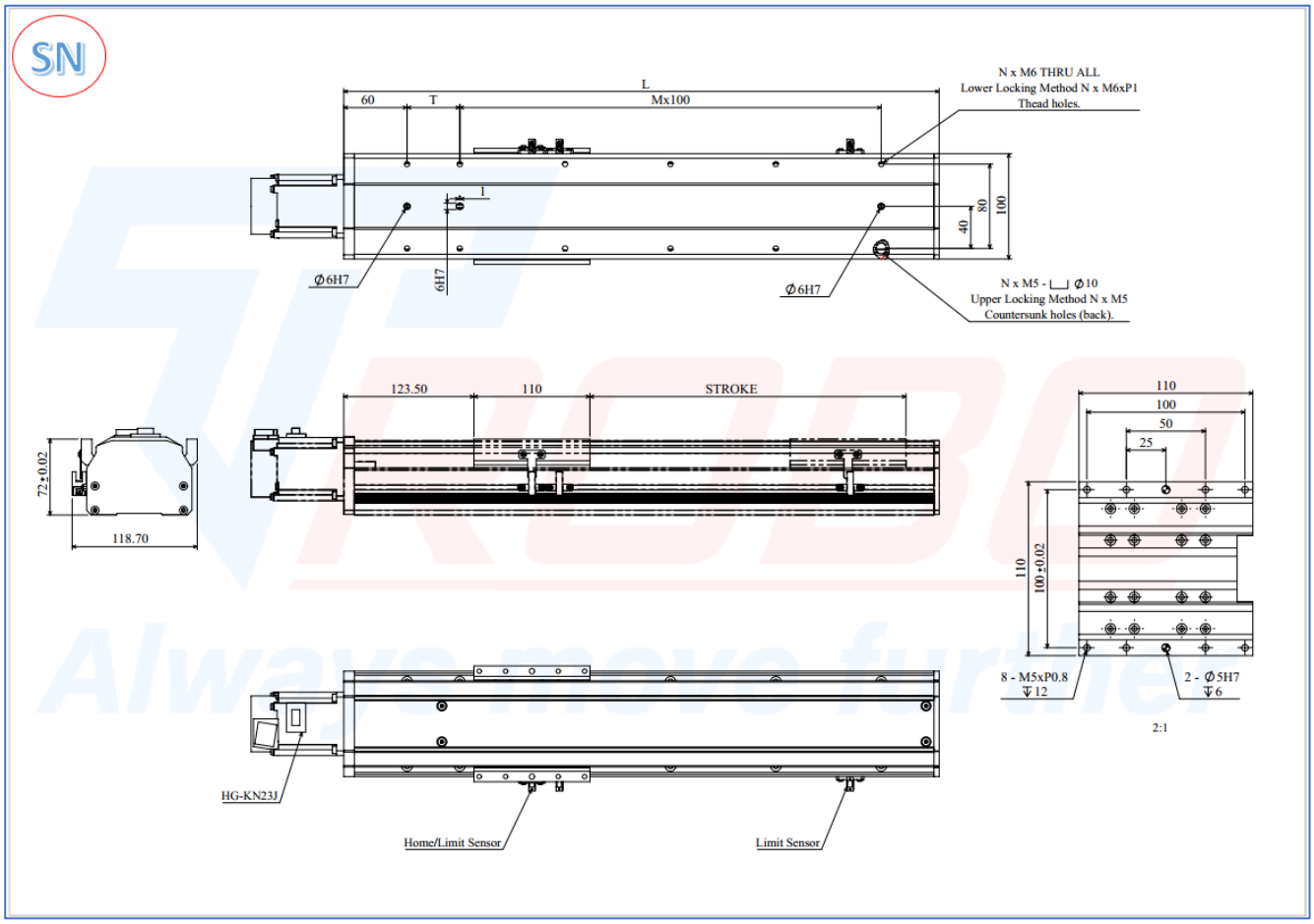

STROKE	50	100	150	200	250	300	350	400	450	500	550	600	650	700	750	800
L	315	365	415	465	515	565	615	665	715	765	815	865	915	965	1015	1065
M	1	2	2	3	3	4	4	5	5	6	6	7	7	8	8	9
N	6	8	8	10	10	12	12	14	14	16	16	18	18	20	20	22
T	100	50	100	50	100	50	100	50	100	50	100	50	100	50	100	50
Mass (Kg)	**3.6**	**4.1**	**4.65**	**5.15**	**5.65**	**6.15**	**6.65**	**7.15**	**7.65**	**8.15**	**8.65**	**9.15**	**9.65**	**10.1**	**10.65**	**11.1**

Unit： mm Mass without motor (±10%).

(*) Specification subject to change without notices.

TS100-DN

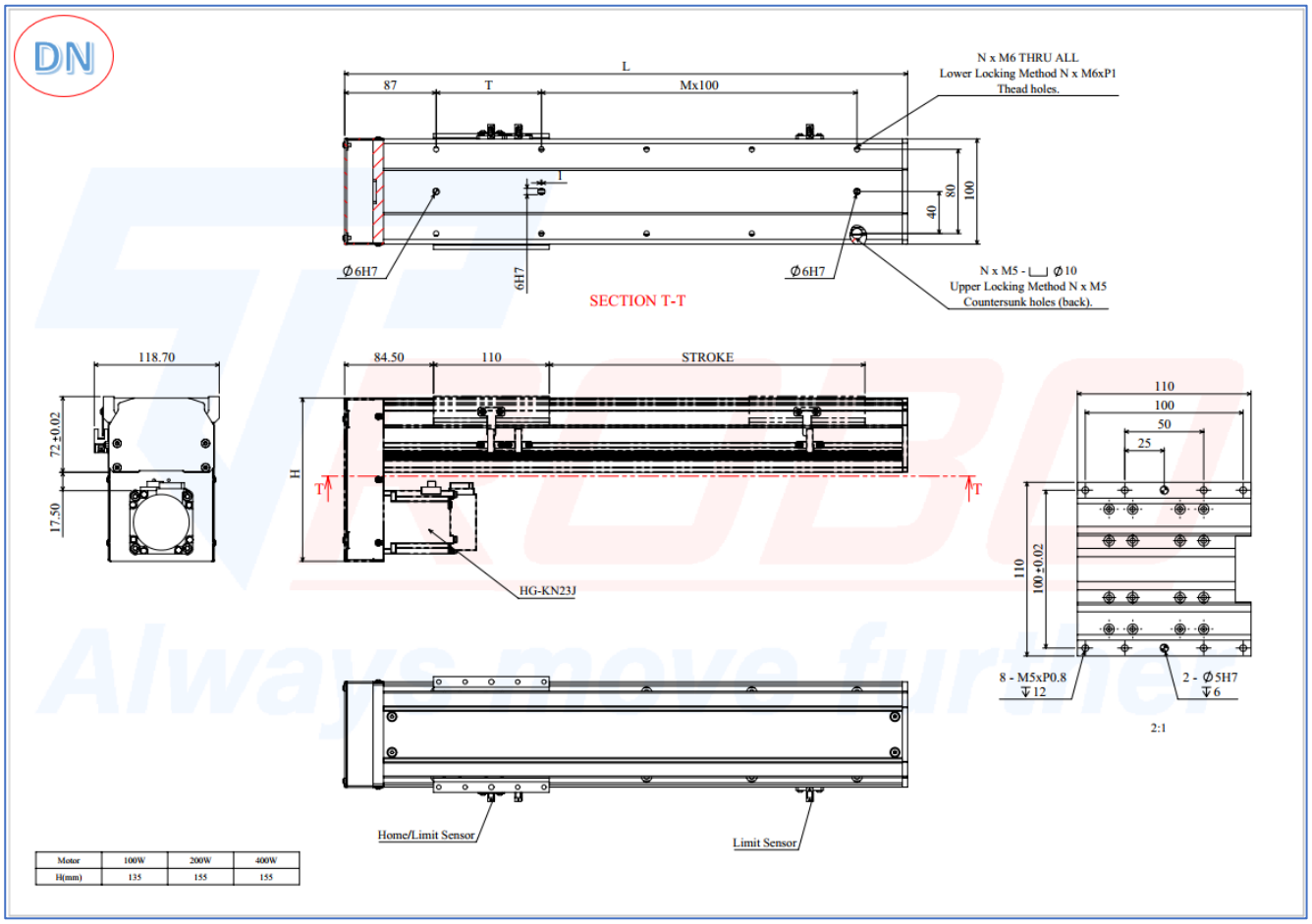

STROKE	50	100	150	200	250	300	350	400	450	500	550	600	650	700	750	800
L	285	335	385	435	485	535	585	635	685	735	785	835	885	935	985	1035
M	1	1	2	2	3	3	4	4	5	5	6	6	7	7	8	8
N	6	6	8	8	10	10	12	12	14	14	16	16	18	18	20	20
T	50	100	50	100	50	100	50	100	50	100	50	100	50	100	50	100
Mass (Kg)	**3.75**	**4.25**	**4.75**	**5.25**	**5.75**	**6.25**	**6.75**	**7.25**	**7.75**	**8.25**	**8.75**	**9.25**	**9.75**	**10.2**	**10.75**	**11.2**

Unit： mm Mass without motor (±10%).

(*) Specification subject to change without notices.

TS100-LN

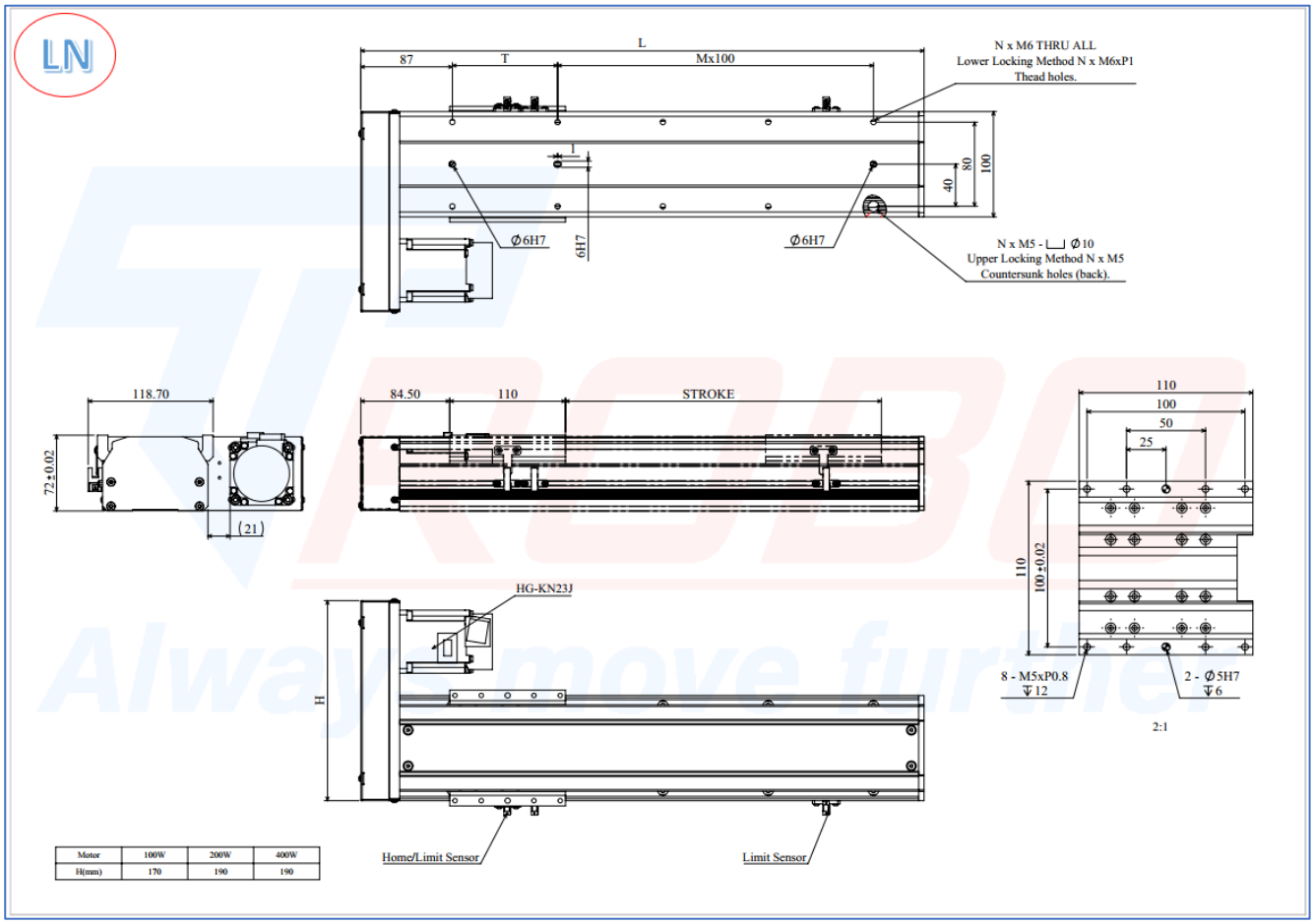

STROKE	50	100	150	200	250	300	350	400	450	500	550	600	650	700	750	800
L	285	335	385	435	485	535	585	635	685	735	785	835	885	935	985	1035
M	1	1	2	2	3	3	4	4	5	5	6	6	7	7	8	8
N	6	6	8	8	10	10	12	12	14	14	16	16	18	18	20	20
T	50	100	50	100	50	100	50	100	50	100	50	100	50	100	50	100
Mass (Kg)	**3.75**	**4.25**	**4.75**	**5.25**	**5.75**	**6.25**	**6.75**	**7.25**	**7.75**	**8.25**	**8.75**	**9.25**	**9.75**	**10.2**	**10.75**	**11.2**

Unit： mm Mass without motor (±10%).

(*) Specification subject to change without notices.

TS100-RN

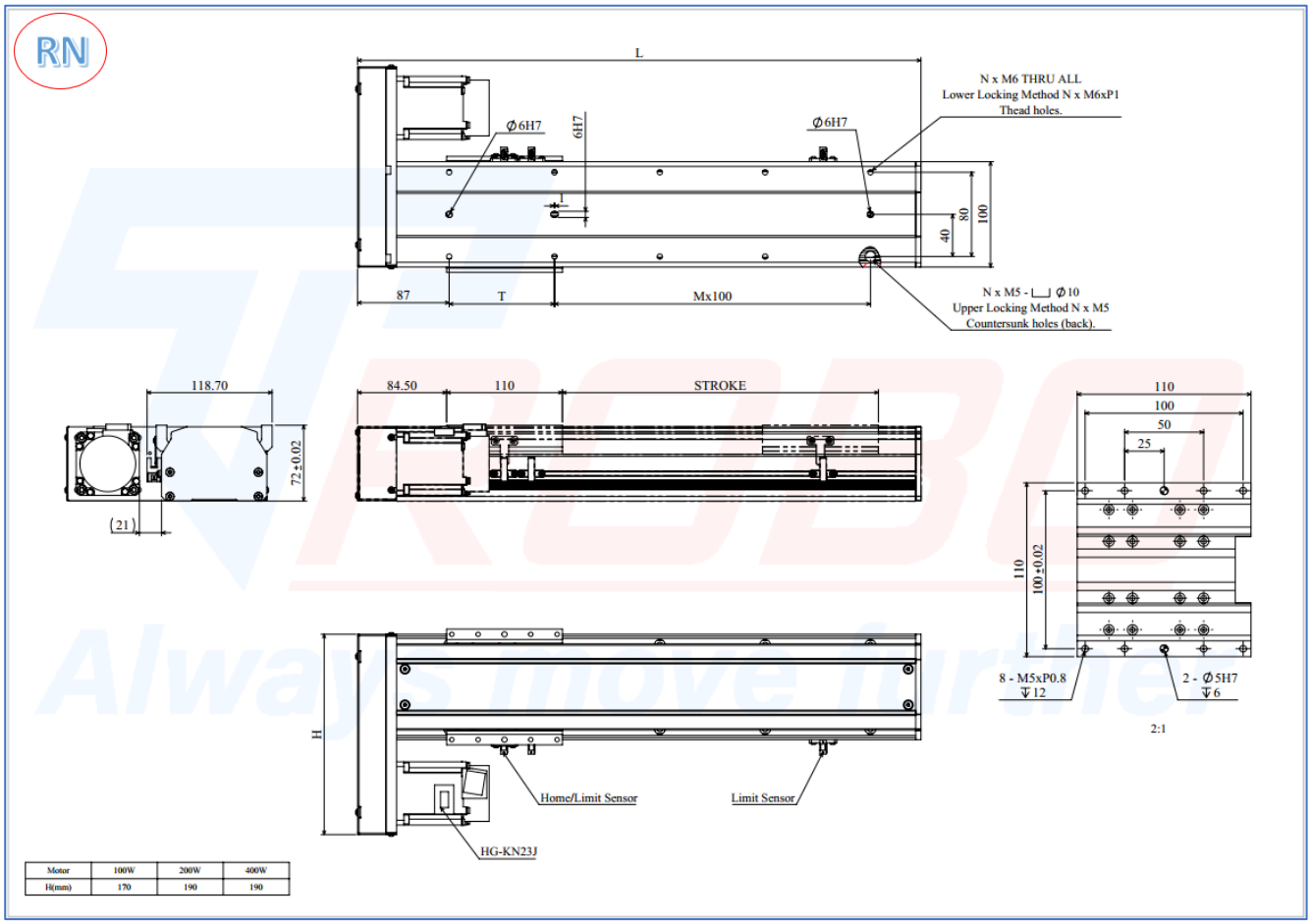

Motor	100W	200W	400W
H(mm)	170	190	190

STROKE	50	100	150	200	250	300	350	400	450	500	550	600	650	700	750	800
L	285	335	385	435	485	535	585	635	685	735	785	835	885	935	985	1035
M	1	1	2	2	3	3	4	4	5	5	6	6	7	7	8	8
N	6	6	8	8	10	10	12	12	14	14	16	16	18	18	20	20
T	50	100	50	100	50	100	50	100	50	100	50	100	50	100	50	100
Mass (Kg)	**3.75**	**4.25**	**4.75**	**5.25**	**5.75**	**6.25**	**6.75**	**7.25**	**7.75**	**8.25**	**8.75**	**9.25**	**9.75**	**10.2**	**10.75**	**11.2**

Unit： mm Mass without motor (±10%).

(*) Specification subject to change without notices.

TS120 MODEL

● Motor Direction

SN	DN	LN	RN

● Ordering Method

TS120 - P10 - C - S500 - SN - M40B - 3

Base Style	
120	*Body size 120*

Accuracy Class	
H	*High precision*
C	*Common precision*

Motor type		Power	
M	*Mitsubishi*	20	*200W*
P	*Panasonic*	40	*400W*
D	*Delta*	**Brake**	
		_	*No Brake*
		B	*With Brake*
**For Z: Motor from customer*			

Screw Lead	
05	*05 mm*
10	*10 mm*
20	*20 mm*

Stroke
50-800
interval/50mm

Motor direction	
SN	*Motor Exposed*
DN	*Motor on Lower Side*
LN	*Motor on Left Side*
RN	*Motor on Right Side*

Q'ty Sensor		Sensor Type	
1	*1pcs*	_	*NPN*
2	*2pcs*	P	*PNP*
3	*3pcs*		
_	*No Sensor*		

Example	
Order code	**TS120 - P10 - C – S700 - SN – P40-3P**
Description	Single actuator body size 120; Ball screw Lead 10, Common precision; Stroke 700mm; Motor Exposed; Motor Panasonic 400W; 3 sensor PNP

● Specification

Screw Lead		P05	P10	P20
Ball Screw (C/H)		*Ø15 – C7/ Ø15 – C5*		
Max Speed		*250mm/s [at 3000 rpm]*	*500mm/s [at 3000 rpm]*	*1000mm/s [at 3000 rpm]*
Max Load	Horizontal Installation	*53 kg*	*42 kg*	*25 kg*
	Vertical Installation	*34 kg*	*28 kg*	*16 kg*
Repeatability (C/H)		*± 0.01 mm/± 0.005 mm*		
Linear Guider (mm)		W15 – H24 2Rail 4Block		
Motor Linkage		Coupling		
Sensor Components		Panasonic PM-T65(NPN)		
Motor power AC (W)		400W		

I/O circuit diagram with connector:

NPN:

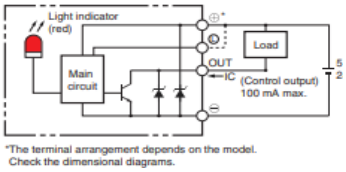

PNP:

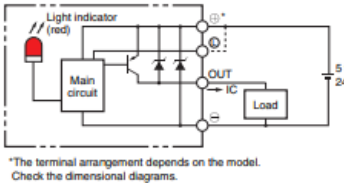

● Max Payload Diameters / Max Static Torque Table

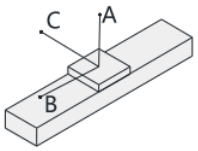

Unit: mm

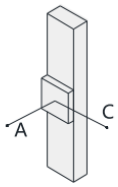

Unit: mm

Horizontal installation		A	B	C	Vertical installation		A	C
Lead 5	30 kg	712	302	315	Lead 5	10 kg	352	332
	50 kg	293	104	110		20 kg	78	86
Lead 10	20 kg	660	255	259	Lead 10	8 kg	221	205
	40 kg	240	95	95		15 kg	96	98
Lead 20	10 kg	521	225	230	Lead 20	5 kg	255	262
	20 kg	195	52	55		10 kg	72	75

Acceleration/Deceleration: $1000mm/s^2$

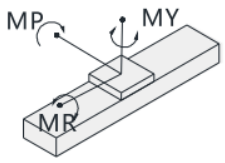

Unit: N.m

Maximum static toque	
MY	155
MP	154
MR	135

TS120-SN

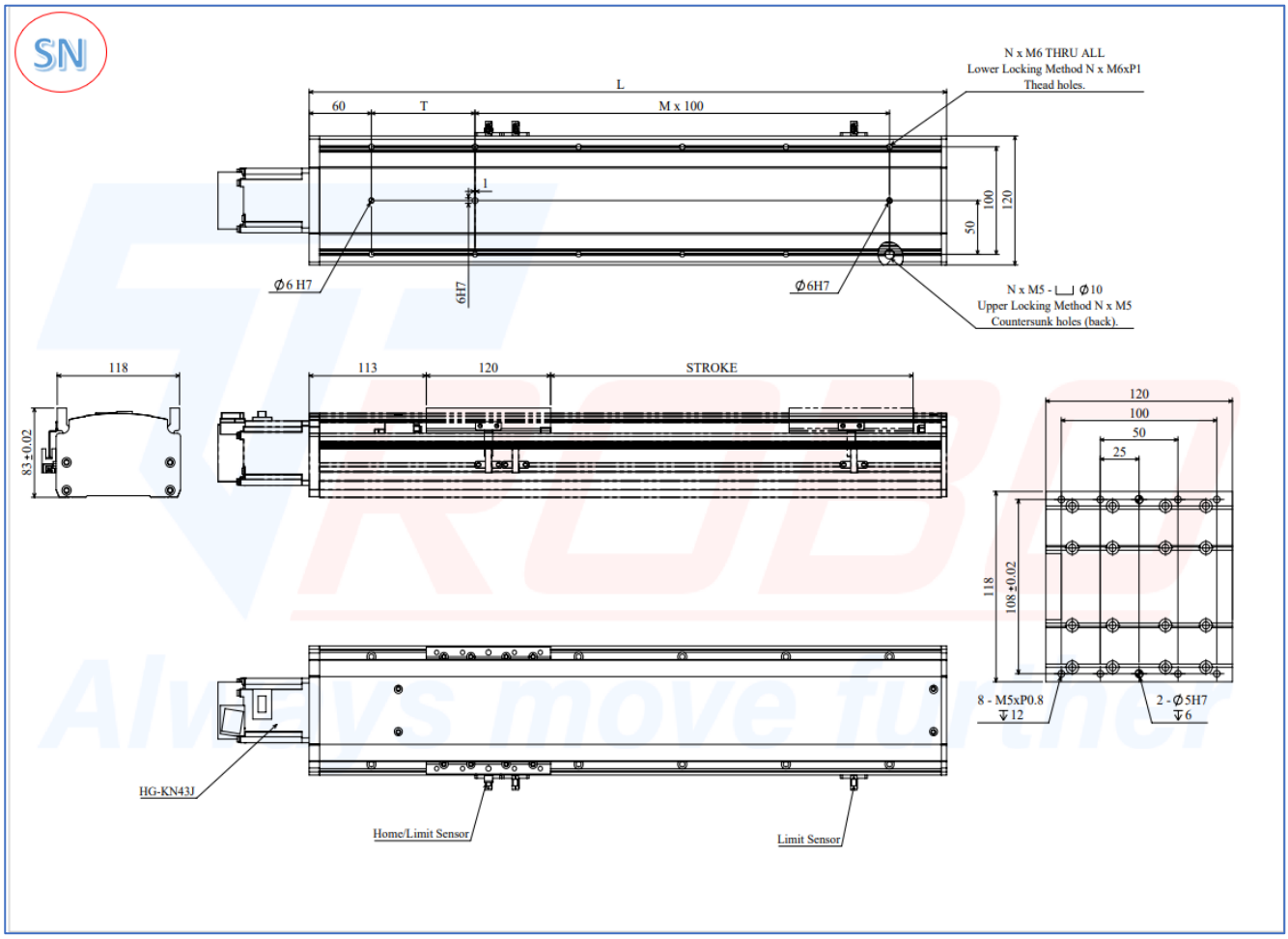

STROKE	100	150	200	250	300	350	400	450	500	550	600	650	700
L	365	415	465	515	565	615	665	715	765	815	865	915	965
M	2	2	3	3	4	4	5	5	6	6	7	7	8
N	8	8	10	10	12	12	14	14	16	16	18	18	20
T	50	100	50	100	50	100	50	100	50	100	50	100	50
Mass (Kg)	**5.6**	**6.2**	**6.8**	**7.4**	**8.0**	**8.6**	**9.2**	**9.8**	**10.4**	**11.0**	**11.6**	**12.2**	**12.8**

STROKE	750	800	850	900	950	1000
L	1015	1065	1115	1165	1215	1265
M	8	9	9	10	10	11
N	20	22	22	24	24	26
T	100	50	100	50	100	50
Mass (Kg)	**13.4**	**14.0**	**14.6**	**15.2**	**16.8**	**17.4**

Unit： mm Mass without motor (±10%).
(*) Specification subject to change without notices.

TS120-DN

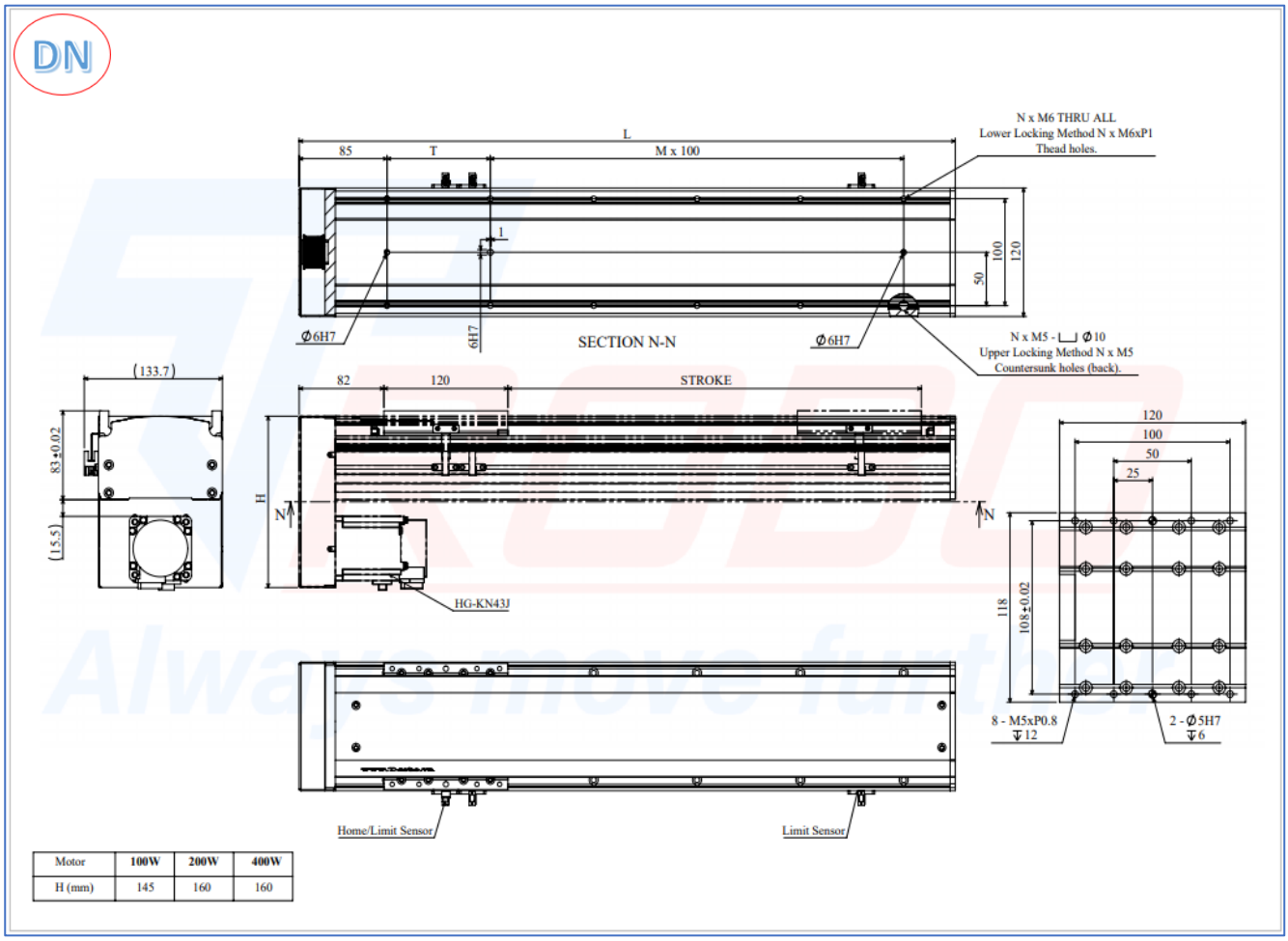

Motor	100W	200W	400W
H (mm)	145	160	160

STROKE	200	250	300	350	400	450	500	550	600	650	700
L	435	485	535	585	635	685	735	785	835	885	935
M	2	3	3	4	4	5	5	6	6	7	7
N	8	10	10	12	12	14	14	16	16	18	18
T	100	50	100	50	100	50	100	50	100	50	100
Mass (Kg)	**7.0**	**7.6**	**8.2**	**8.8**	**9.4**	**10.0**	**10.6**	**11.2**	**11.8**	**12.4**	**13.0**

STROKE	750	800	850	900	950	1000
L	985	1035	1085	1135	1185	1235
M	8	8	9	9	10	10
N	20	20	22	22	24	24
T	50	100	50	100	50	100
Mass (Kg)	**13.6**	**14.2**	**14.8**	**15.4**	**16.0**	**16.6**

Unit： mm Mass without motor (±10%).
(*) Specification subject to change without notices.

TS120-LN

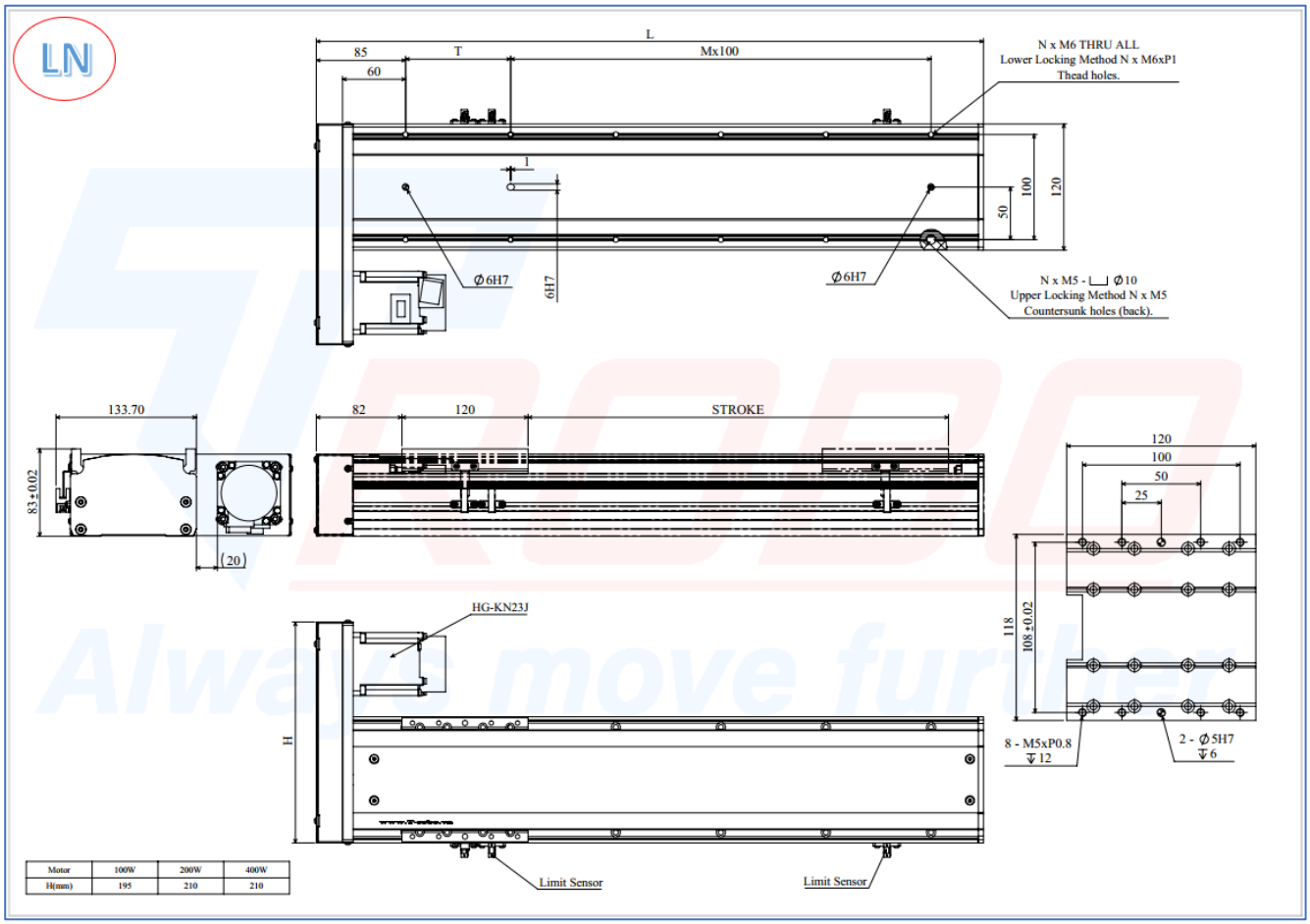

STROKE	100	150	200	250	300	350	400	450	500	550	600	650	700
L	335	385	435	485	535	585	635	685	735	785	835	885	935
M	1	2	2	3	3	4	4	5	5	6	6	7	7
N	6	8	8	10	10	12	12	14	14	16	16	18	18
T	100	50	100	50	100	50	100	50	100	50	100	50	100
Mass (Kg)	**5.8**	**6.4**	**7.0**	**7.6**	**8.2**	**8.8**	**9.4**	**10.0**	**10.6**	**11.2**	**11.8**	**12.4**	**13.0**

STROKE	750	800	850	900	950	1000
L	985	1035	1085	1135	1185	1235
M	8	8	9	9	10	10
N	20	20	22	22	24	24
T	50	100	50	100	50	100
Mass (Kg)	**13.6**	**14.2**	**14.8**	**15.4**	**16.0**	**16.6**

Unit： mm Mass without motor (±10%).
(*) Specification subject to change without notices.

TS120-RN

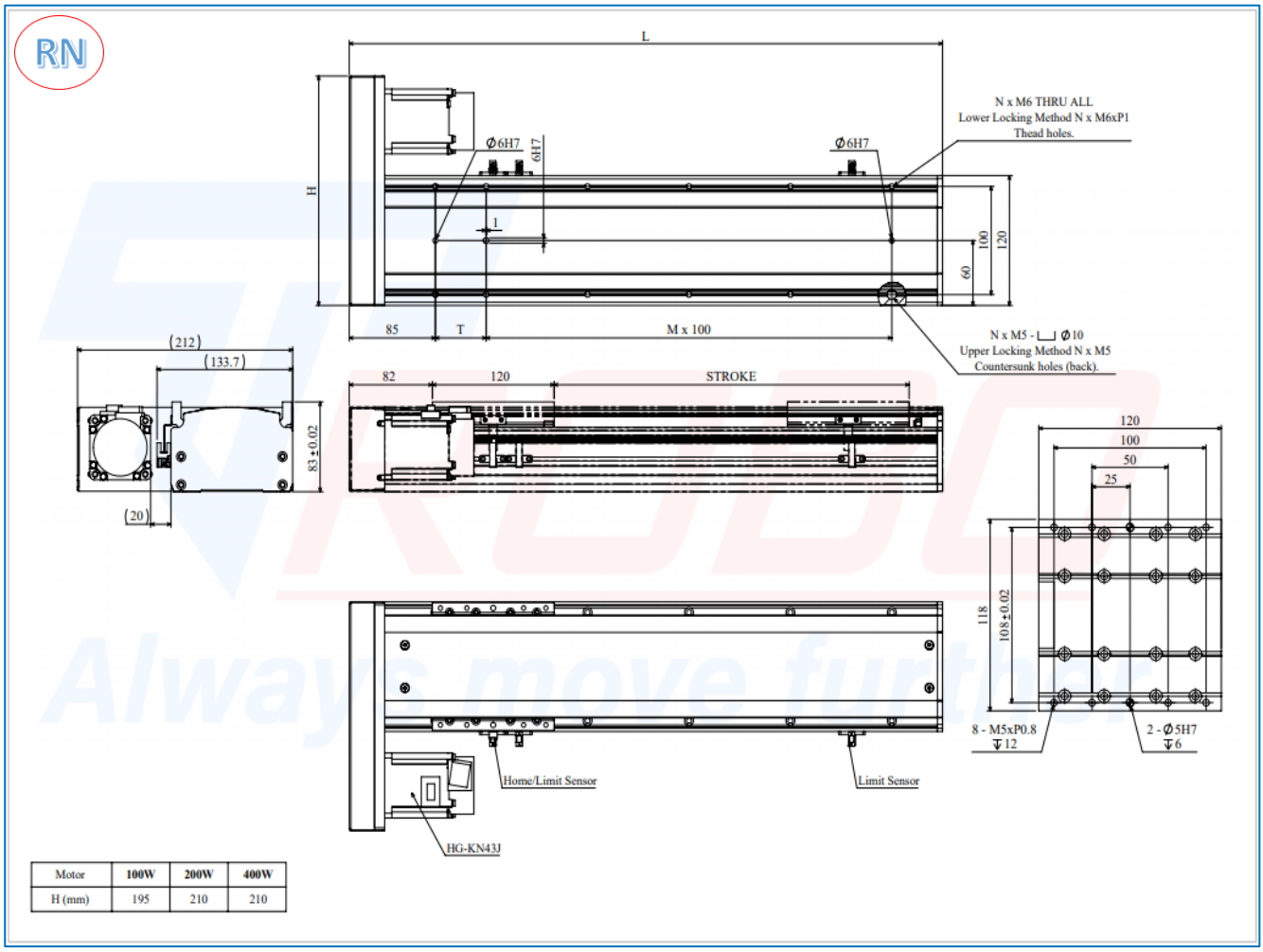

Motor	100W	200W	400W
H (mm)	195	210	210

STROKE	100	150	200	250	300	350	400	450	500	550	600	650	700
L	335	385	435	485	535	585	635	685	735	785	835	885	935
M	1	2	2	3	3	4	4	5	5	6	6	7	7
N	6	8	8	10	10	12	12	14	14	16	16	18	18
T	100	50	100	50	100	50	100	50	100	50	100	50	100
Mass (Kg)	**5.8**	**6.4**	**7.0**	**7.6**	**8.2**	**8.8**	**9.4**	**10.0**	**10.6**	**11.2**	**11.8**	**12.4**	**13.0**

STROKE	750	800	850	900	950	1000
L	985	1035	1085	1135	1185	1235
M	8	8	9	9	10	10
N	20	20	22	22	24	24
T	50	100	50	100	50	100
Mass (Kg)	**13.6**	**14.2**	**14.8**	**15.4**	**16.0**	**16.6**

Unit： mm Mass without motor (±10%).
(*) Specification subject to change without notices.

TS140 MODEL

● Motor Direction

SN	DN	LN	RN

● Ordering Method

TS140 - P10 - C - S850 - SN - M70 - 3P

Base Style	
140	*Body size 140*

Accuracy Class	
H	*High precision*
C	*Common precision*

Motor type		Power	
M	*Mitsubishi*	20	*200W*
P	*Panasonic*	40	*400W*
D	*Delta*	70	*750W*
**For Z: Motor from customer*		Brake	
		_	*No Brake*
		B	*With Brake*

Screw Lead	
05	*05 mm*
10	*10 mm*
20	*20 mm*

Stroke
50-800
interval/50mm

Motor direction	
SN	*Motor Exposed*
DN	*Motor on Lower Side*
LN	*Motor on Left Side*
RN	*Motor on Right Side*

Q'ty Sensor		Sensor Type	
1	*1pcs*	_	*NPN*
2	*2pcs*	P	*PNP*
3	*3pcs*		
_	*No Sensor*		

Example	
Order code	**TS140 - P10 - C - S700 - SN - P70 - 3P**
Description	Single actuator body size 140; Ball screw Lead 10, Common precision; Stroke 700mm; Motor Exposed; Motor panasonic 750W; 3 sensor PNP

● Specification

Screw Lead		P05	P10	P20
Ball Screw (C/H)		*Ø15 – C7/ Ø15 – C5*		
Max Speed		*250mm/s [at 3000 rpm]*	*500mm/s [at 3000 rpm]*	*1000mm/s [at 3000 rpm]*
Max Load	Horizontal Installation	*60 kg*	*50 kg*	*30 kg*
	Vertical Installation	*40 kg*	*30 kg*	*20 kg*
Repeatability (C/H)		*± 0.01 mm/± 0.005 mm*		
Linear Guider (mm)		W15 - H24 2Rail 4 Block		
Motor Linkage		Coupling		
Sensor Components		Panasonic PM-T65(NPN)		
Motor power AC (W)		400W		

I/O circuit diagram with connector:

NPN:

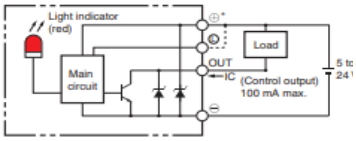

PNP:

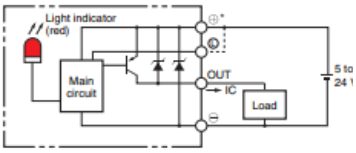

● Max Payload Diameters / Max Static Torque Table

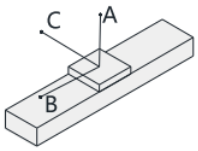

Unit: mm

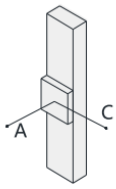

Unit: mm

Horizontal installation		A	B	C	Vertical installation		A	C
Lead 5	30kg	812	420	500	Lead 5	20kg	375	386
	50kg	285	150	170		35kg	81	88
Lead 10	25kg	712	265	350	Lead 10	15kg	235	240
	35kg	325	155	165		25kg	96	100
Lead 20	15kg	556	265	270	Lead 20	10kg	272	281
	25kg	231	115	120		18kg	82	86

Acceleration/Deceleration: $\mathbf{1000mm/s^2}$

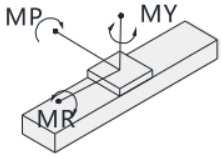

Unit: mm

Maximum static toque	
MY	163
MP	160
MR	140

TS140-SN

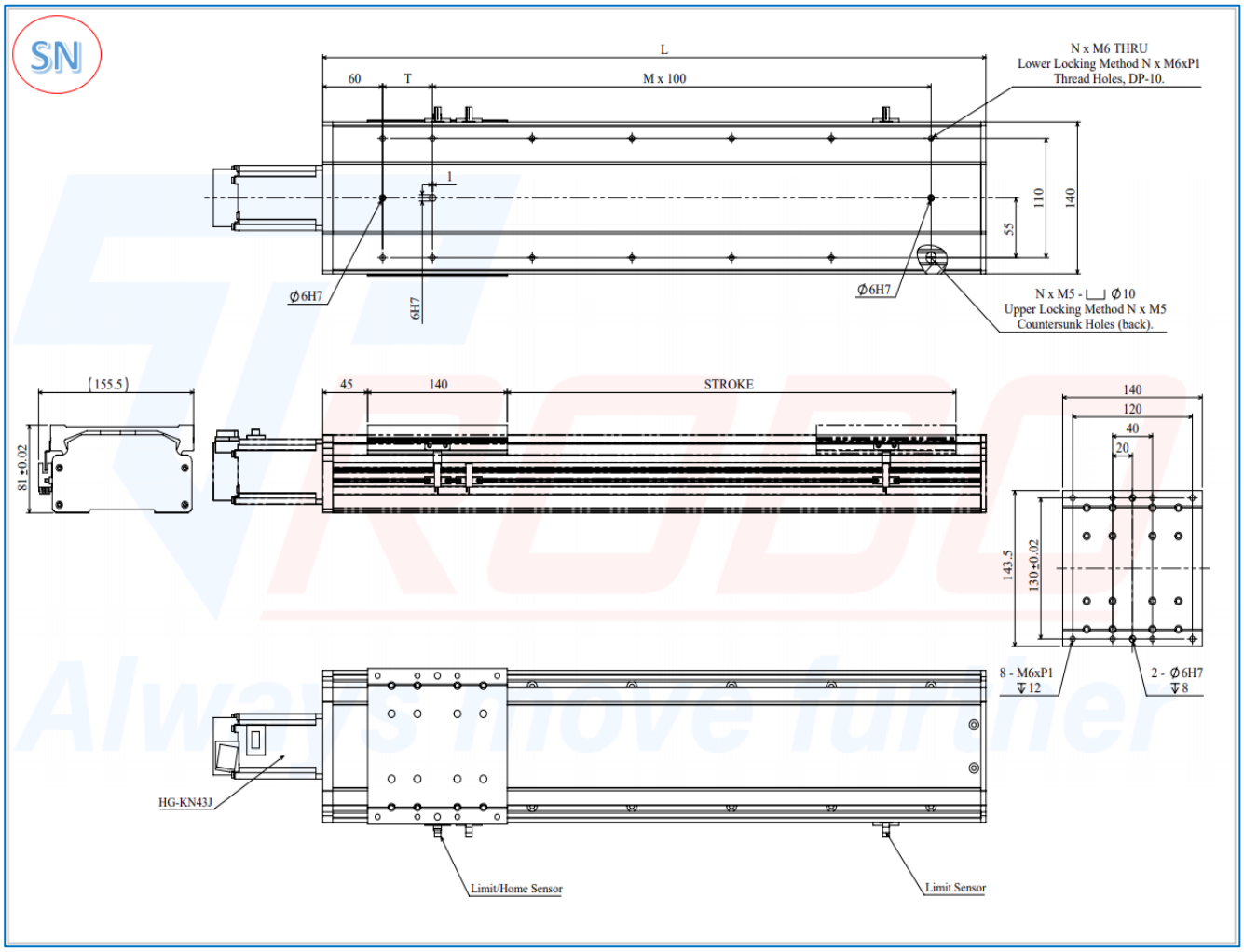

STROKE	100	150	200	250	300	350	400	450	500	550	600	650	700
L	315	365	415	465	515	565	615	665	715	765	815	865	915
M	1	2	2	3	3	4	4	5	5	6	6	7	7
N	6	8	8	10	10	12	12	14	14	16	16	18	18
T	100	50	100	50	100	50	100	50	100	50	100	50	100
Mass (Kg)	**5.5**	**6.1**	**6.7**	**7.3**	**7.9**	**8.5**	**9.1**	**9.7**	**10.3**	**10.9**	**11.5**	**12.1**	**12.7**

STROKE	750	800	850	900	950	1000
L	965	1015	1065	1115	1165	1215
M	8	8	9	9	10	10
N	20	20	22	22	24	24
T	50	100	50	100	50	100
Mass (Kg)	**13.3**	**13.9**	**14.5**	**15.1**	**15.7**	**16.3**

Unit： mm Mass without motor (±10%).
(*) Specification subject to change without notices.

TS140-DN

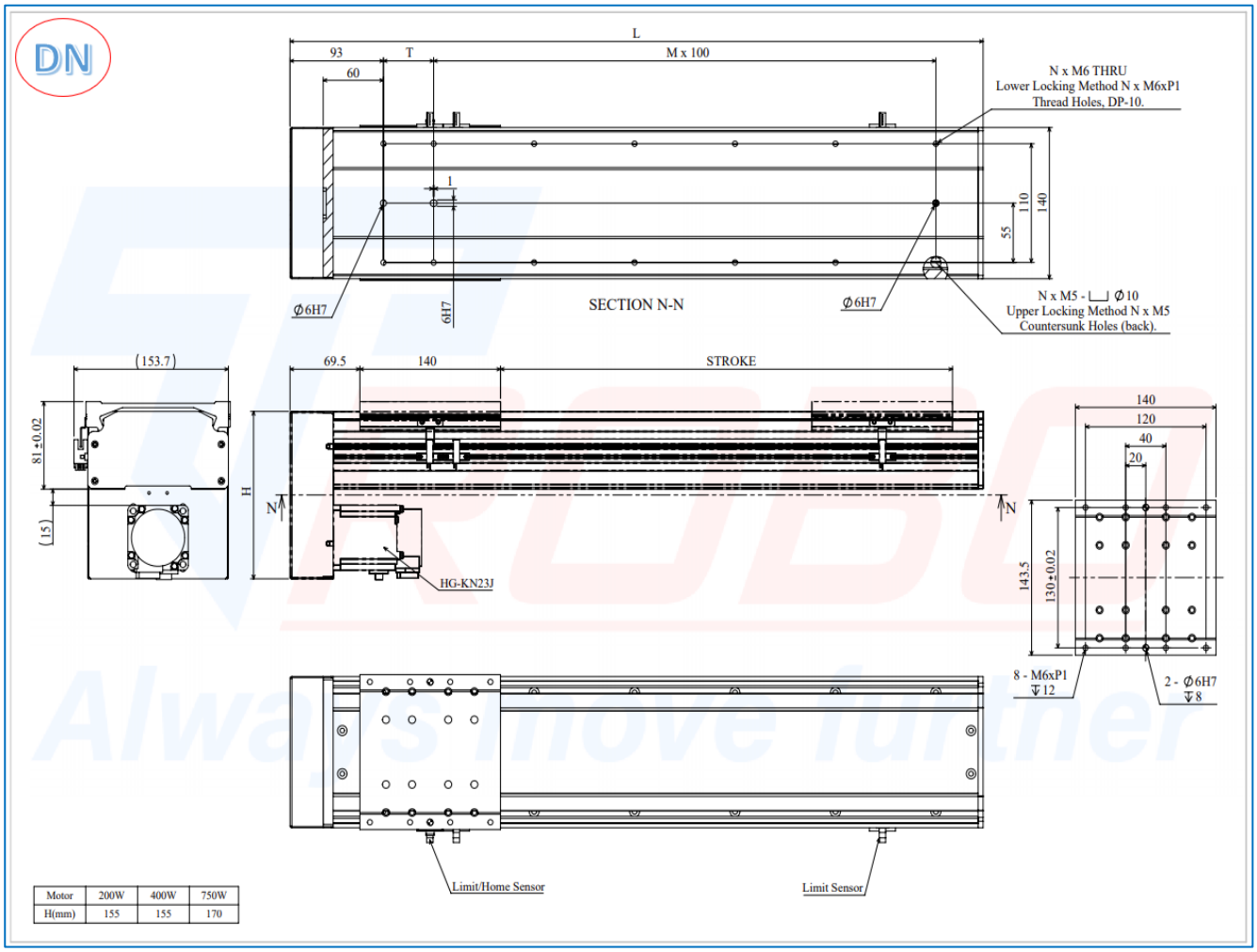

Motor	200W	400W	750W
H(mm)	155	155	170

STROKE	200	250	300	350	400	450	500	550	600	650	700
L	440	490	540	590	640	690	740	790	840	890	940
M	2	3	3	4	4	5	5	6	6	7	7
N	8	10	10	12	12	14	14	16	16	18	18
T	100	50	100	50	100	50	100	50	100	50	100
Mass (Kg)	**7.0**	**7.6**	**8.2**	**8.8**	**9.4**	**10.0**	**10.6**	**11.2**	**11.8**	**12.4**	**13.0**

STROKE	750	800	850	900	950	1000
L	990	1040	1090	1140	1190	1240
M	8	8	9	9	10	10
N	20	20	22	22	24	24
T	50	100	50	100	50	100
Mass (Kg)	**13.6**	**14.2**	**14.8**	**15.4**	**16.0**	**16.6**

Unit： mm Mass without motor (±10%).
(*) Specification subject to change without notices.

TS140-LN

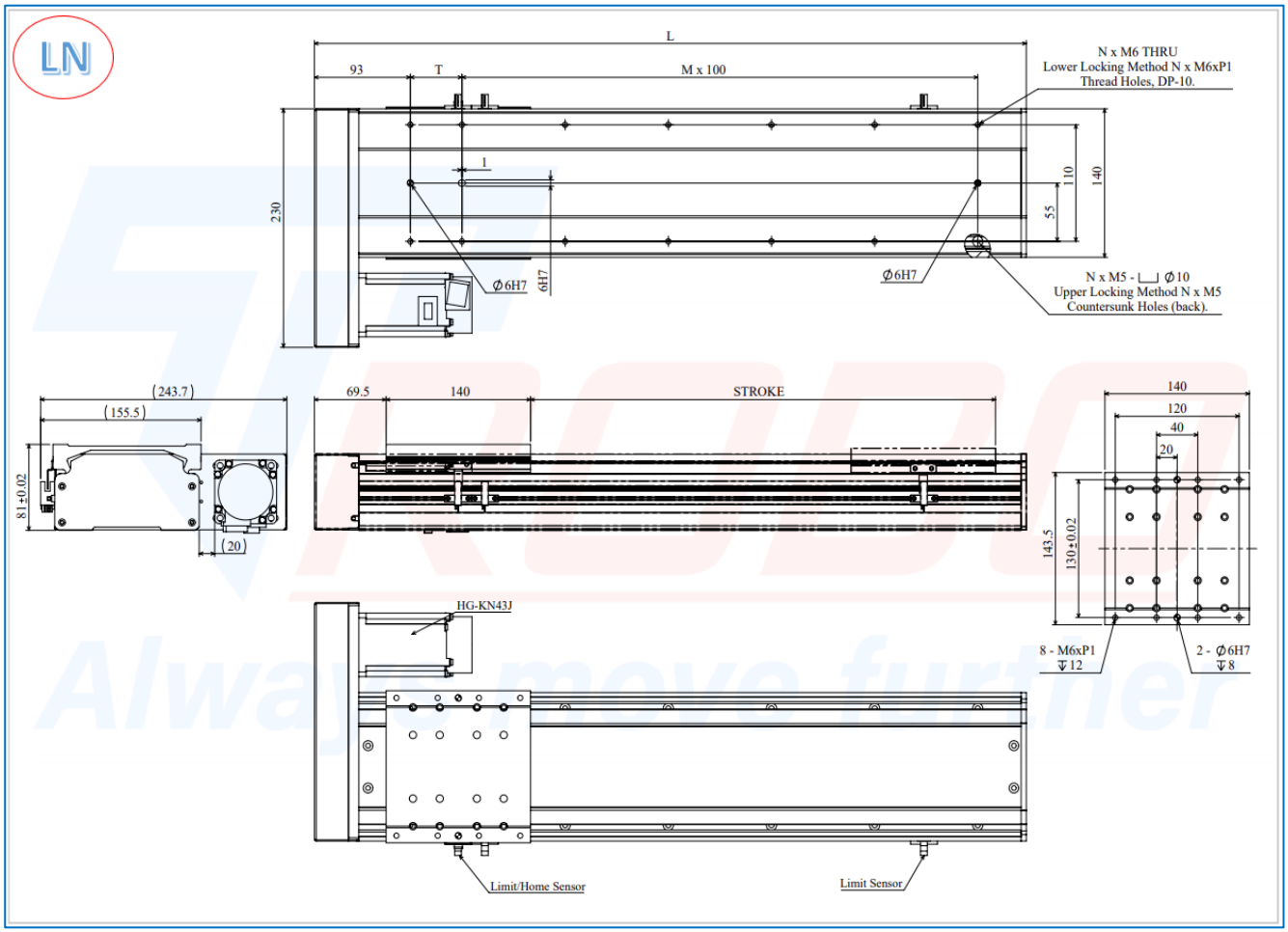

STROKE	100	150	200	250	300	350	400	450	500	550	600	650	700
L	340	390	440	490	540	590	640	690	740	790	840	890	940
M	1	2	2	3	3	4	4	5	5	6	6	7	7
N	6	8	8	10	10	12	12	14	14	16	16	18	18
T	100	50	100	50	100	50	100	50	100	50	100	50	100
Mass (Kg)	**5.8**	**6.4**	**7.0**	**7.6**	**8.2**	**8.8**	**9.4**	**10.0**	**10.6**	**11.2**	**11.8**	**12.4**	**13.0**

STROKE	750	800	850	900	950	1000
L	990	1040	1090	1140	1190	1240
M	8	8	9	9	10	10
N	20	20	22	22	24	24
T	50	100	50	100	50	100
Mass (Kg)	**13.6**	**14.2**	**14.8**	**15.4**	**16.0**	**16.6**

Unit： mm Mass without motor (±10%).
(*) Specification subject to change without notices.

TS140-RN

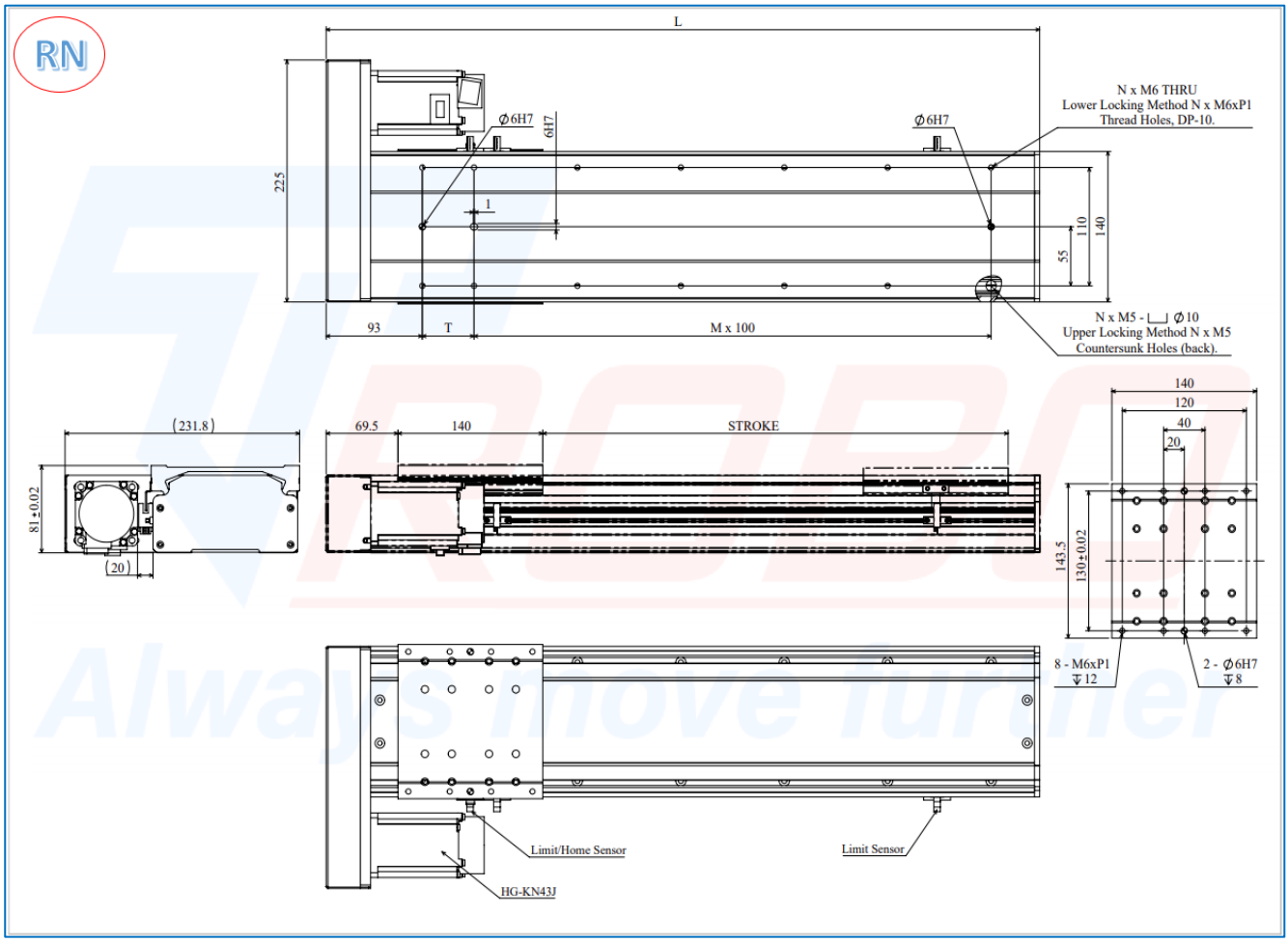

STROKE	100	150	200	250	300	350	400	450	500	550	600	650	700
L	340	390	440	490	540	590	640	690	740	790	840	890	940
M	1	2	2	3	3	4	4	5	5	6	6	7	7
N	6	8	8	10	10	12	12	14	14	16	16	18	18
T	100	50	100	50	100	50	100	50	100	50	100	50	100
Mass (Kg)	**5.8**	**6.4**	**7.0**	**7.6**	**8.2**	**8.8**	**9.4**	**10.0**	**10.6**	**11.2**	**11.8**	**12.4**	**13.0**

STROKE	750	800	850	900	950	1000
L	990	1040	1090	1140	1190	1240
M	8	8	9	9	10	10
N	20	20	22	22	24	24
T	50	100	50	100	50	100
Mass (Kg)	**13.6**	**14.2**	**14.8**	**15.4**	**16.0**	**16.6**

Unit： mm Mass without motor (±10%).
(*) Specification subject to change without notices.

BELT SINGLE ACTUATORS

PRODUCT SELECTION

TSB60

- Maximum Stroke 500mm
- Maximum Payload 15kg
- Body With 60mm

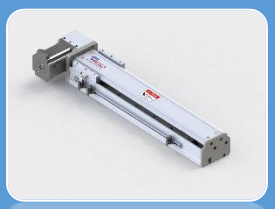

TSB80

- Maximum Stroke 800mm
- Maximum Payload 25kg
- Body With 88mm

SPEED AND LOAD GRAPH

Model	Horizontal
TS60	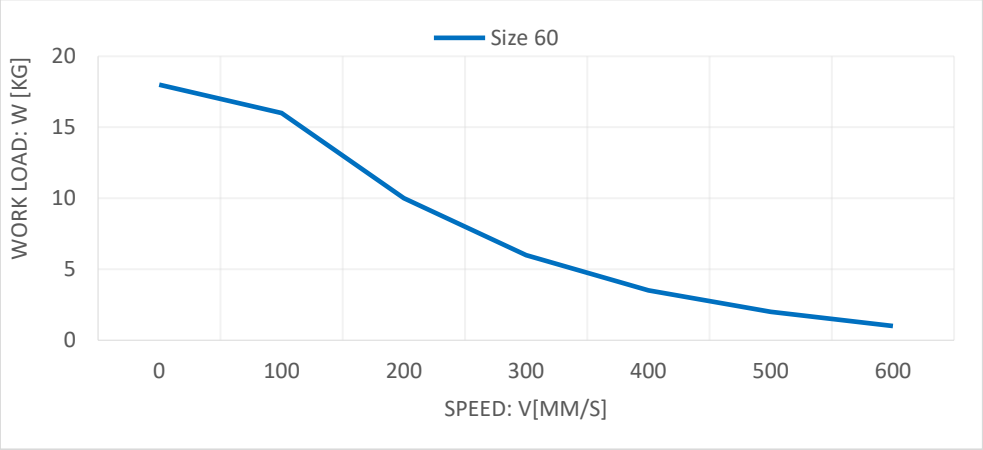
TS80	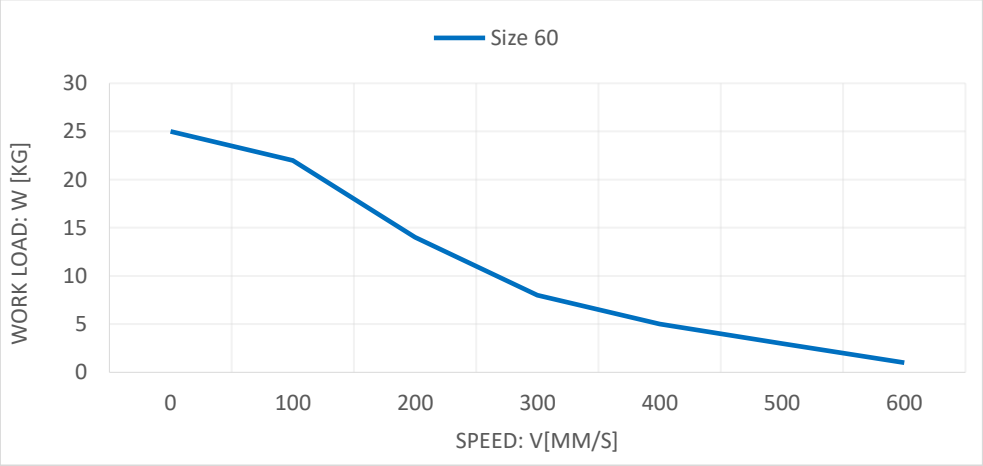

TSB60: The said figures are the reference values prepared based on Sankyo motor 103H7823-0740 (Size 60), so they are subject to changes depending on the type of motor used.

TSB80: The said figures are the reference values prepared based on Sankyo 103H7823-1740 (Size 60) so that they are subject to changes depending on the type of motor used

<Note>

The max speed above can vary depending on the travel distance.

Standard accessories include couplings (pulley) motor mounting. (excluding motor, sensor; can be self-provided or quoted separately)

The acceleration value is set at 0.3G.

ORDER INFORMATION

Model	Body Size	Screw lead	Stroke	Motor direction	Motor	Sensor
(1)	(2)	(3)	(4)	(5)	(6)	(7)
TSB	60	L54	S200	RN	S60	3P

(1) Series	***TSB*** *T-Robo Single Actuator Using Belt*
(2) Body Size	**60, 80**
(3) Lead	**54** 54 mm
(4) Stroke (interval/50mm)	**50 ~ 500** (mm) TS60 **50 ~ 800** (mm) TS80
(5) Motor direction	**LN** Reverse motor mount, **Left** type **RN** Reverse motor mount, **Right** type
(6) Motor	*(7.1) Motor brand* **S** Sankyo **L** Leadshine **O** Oriental *(7.2) Motor size* **56** Size 56 **60** Size 60 **86** Size 86 *(7.3) Brake option* **-** No brake **B** With brake
(7) Sensor	*(8.1) Quality* **-** No sensor **1** 1 pcs **2** 2 pcs **3** 3 pcs *(8.2) Output type* **-** NPN **P** PNP

MOTOR DIRECTION

	LN: Reverse motor mount, Left type.
	RN: Reverse motor mount, Right type.

TSB60 MODEL

● Motor Direction

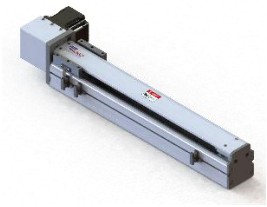	
LN	RN

● Ordering Method

TSB60 - L54 - S100 - RN - S56 - 2P

Base Style	
60	*Body size 60*

Belt Lead	
54	*54 mm*

Stroke
50-500
interval/50mm

Motor direction	
LN	*Motor on Left Side*
RN	*Motor on Right Side*

Motor type		Size	
S	*Sankyo*	56	*56mm*
L	*Leadshine*	60	*60mm*
O	*Oriental*	**Brake**	
		_	*No Brake*
		B	*With Brake*
**For Z: Motor from customer*			

Q'ty Sensor		Sensor Type	
1	*1 pcs*	_	*NPN*
2	*2 pcs*	P	*PNP*
3	*3 pcs*		
_	*No Sensor*		

Example	
Order code	**TSB60 - L54 - S200 - RN - S60 - 2P**
Description	Single actuator using belt, body size 60; Belt Lead 54; Stroke 200mm; Motor Right side; Step Motor Sankyo size 60; 2pcs Sensor Type PNP

● Specification

Motor size		□60	
Belt lead		*54*	
Max Speed		*540mm/s [at 600 rpm]*	
Max Load	Horizontal Installation	*15 kg*	
	Vertical Installation	-	
Repeatability		*± 0. 1 mm*	
Linear Guider (mm)		W15 - H24 1Rail 1 Block	
Belt width (mm)		10	
Sensor Components		Panasonic PM-T65(NPN)	

I/O circuit diagram with connector:

NPN:

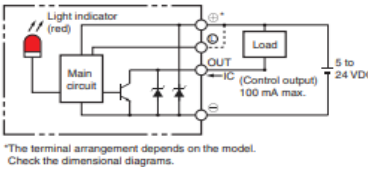

PNP:

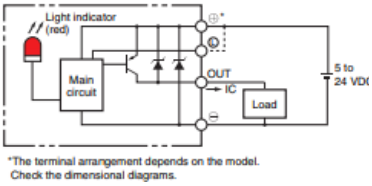

TSB60-RN

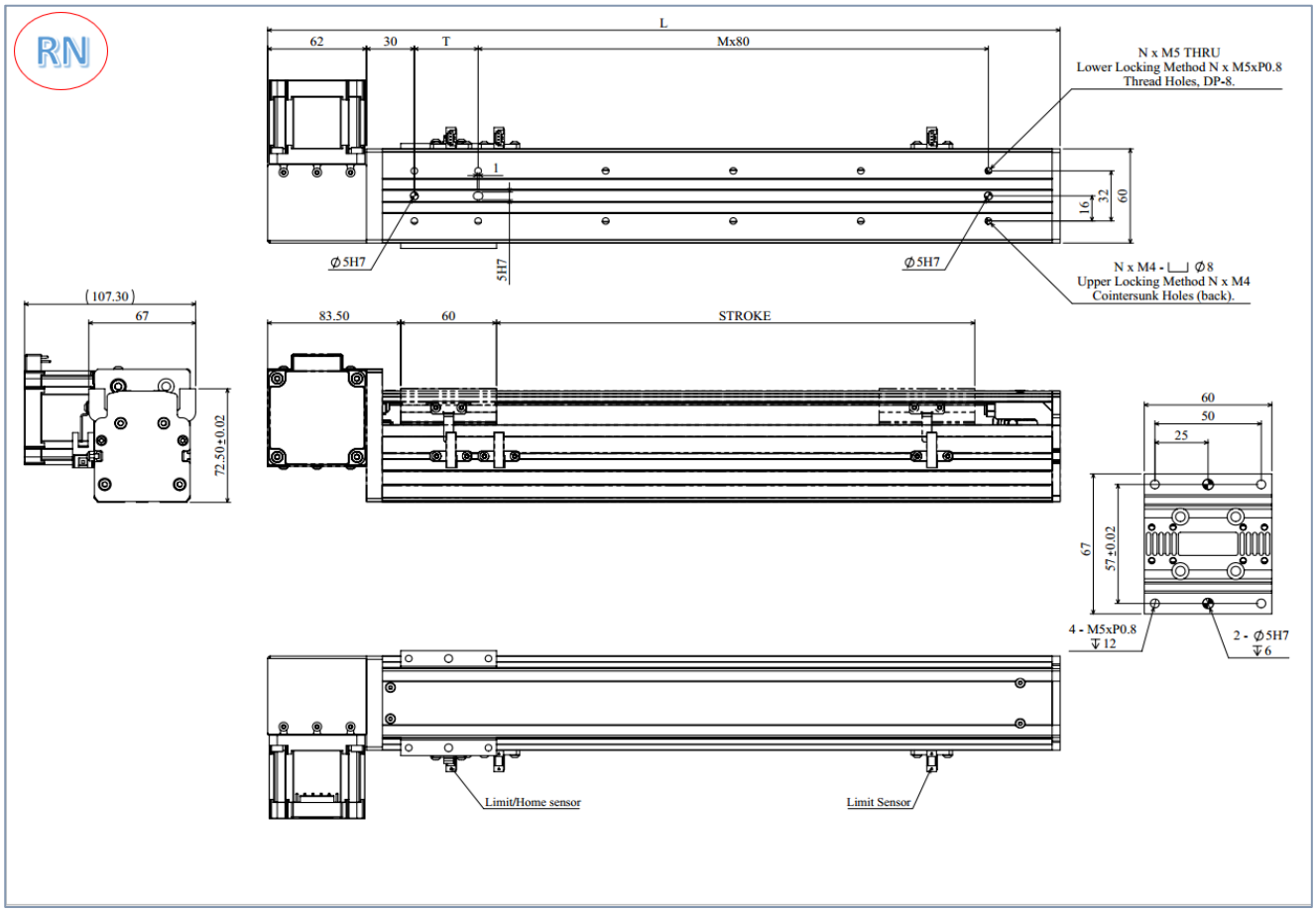

STROKE	50	100	150	200	250	300	350	400	450	500
L	247	297	347	397	447	497	547	597	647	697
M	1	1	2	2	3	3	4	4	5	5
N	6	6	8	8	10	10	12	12	14	14
T	50	100	50	100	50	100	50	100	50	100
Mass (Kg)	**2.20**	**2.60**	**3.00**	**3.40**	**3.80**	**4.20**	**4.60**	**5.0**	**5.40**	**5.80**

Unit： mm Mass without motor (±10%).

(*) Specification subject to change without notices.

TSB60-LN

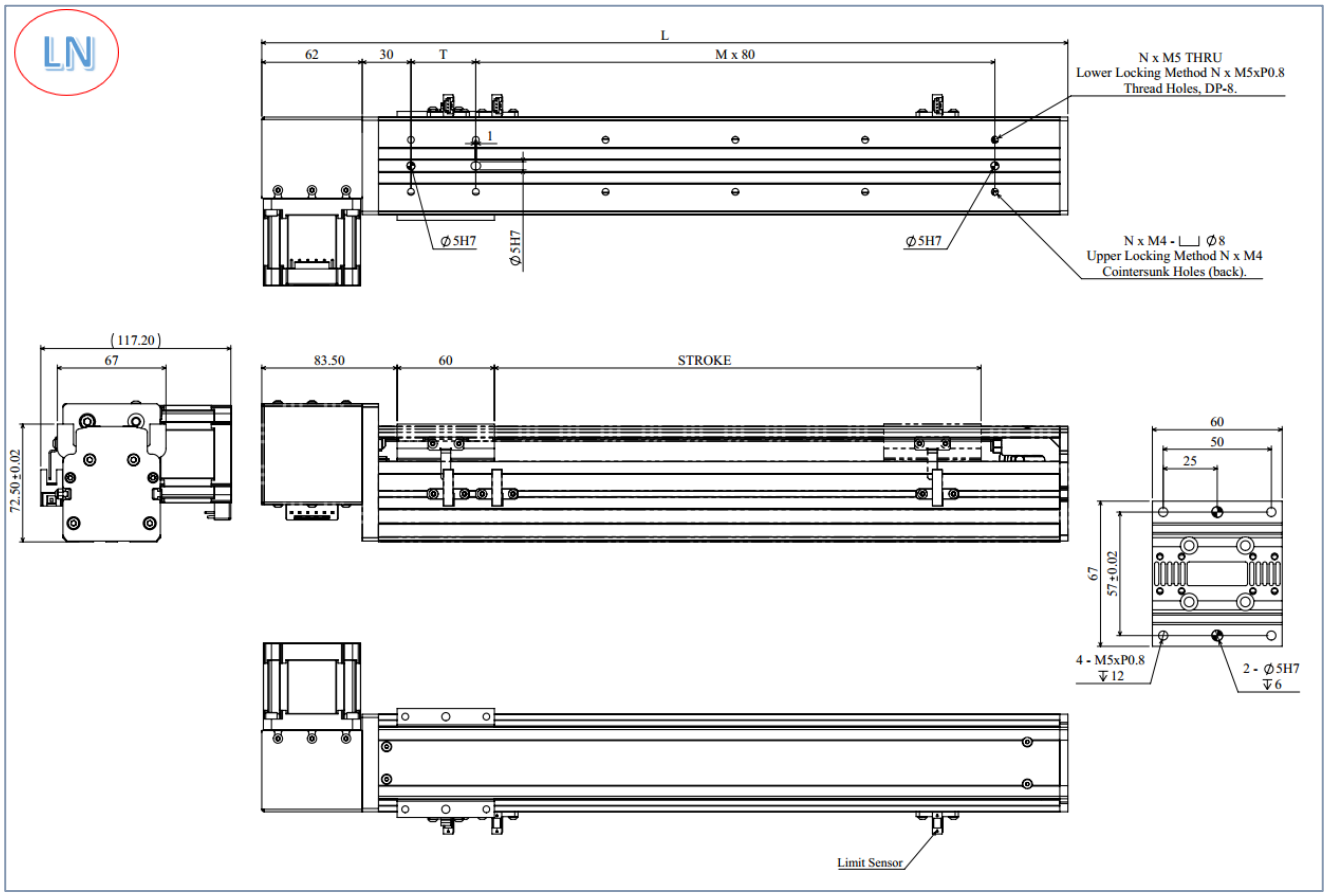

STROKE	50	100	150	200	250	300	350	400	450	500
L	247	297	347	397	447	497	547	597	647	697
M	1	1	2	2	3	3	4	4	5	5
N	6	6	8	8	10	10	12	12	14	14
T	50	100	50	100	50	100	50	100	50	100
Mass (Kg)	**2.20**	**2.60**	**3.00**	**3.40**	**3.80**	**4.20**	**4.60**	**5.0**	**5.40**	**5.80**

Unit： mm Mass without motor (±10%).

(*) Specification subject to change without notices.

TSB80 MODEL

● Motor Direction

LN	RN

● Ordering Method

TSB80 - L54 - S100 - RN - S60 - 2P

Base Style	
80	*Body size 60*

Belt Lead	
54	*54 mm*

Stroke
50-500
interval/50mm

Motor direction	
LN	*Motor on Left Side*
RN	*Motor on Right Side*

Motor type		Size	
S	*Sankyo*	56	*56mm*
L	*Leadshine*	60	*60mm*
O	*Oriental*	**Brake**	
		_	*No Brake*
		B	*With Brake*
**For Z: Motor from customer*			

Q'ty Sensor		Sensor Type	
1	*1 pcs*	_	*NPN*
2	*2 pcs*	P	*PNP*
3	*3 pcs*		
_	*No Sensor*		

Example	
Order code	**TSB80 - L54 - S200 - RN - S60 - 2P**
Description	Single actuator using belt, body size 80; Belt Lead 54; Stroke 200mm; Motor Right side; Step Motor Sankyo size 60; 2pcs Sensor Type PNP

● Specification

Motor size		□60	
Belt lead		*54*	
Max Speed		*540mm/s [at 600 rpm]*	
Max Load	Horizontal Installation	*25 kg*	
	Vertical Installation	-	
Repeatability		*± 0. 1 mm*	
Linear Guider (mm)		W15 - H24 1Rail 1 Block	
Belt width (mm)		15	
Sensor Components		Panasonic PM-T65(NPN)	

I/O circuit diagram with connector:

NPN:

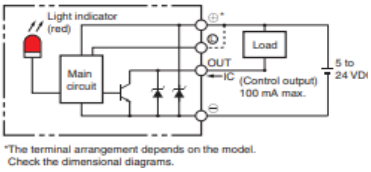

PNP:

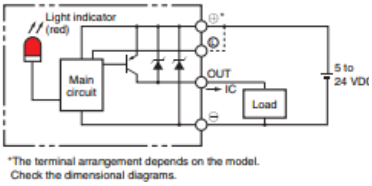

TSB80-RN

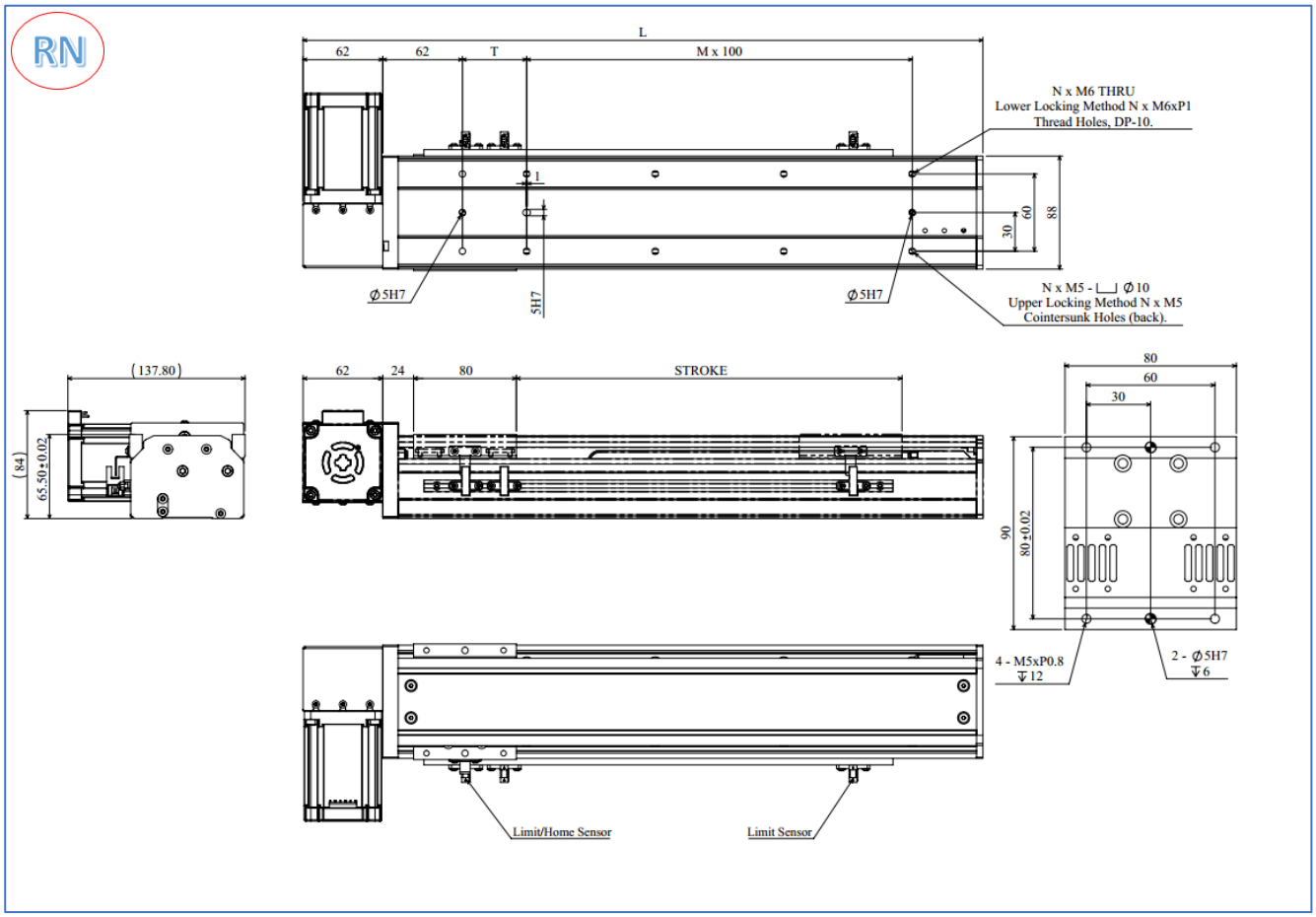

STROKE	50	100	150	200	250	300	350	400	450	500	550	600	650	700	750	800
L	279	329	379	429	479	529	579	629	679	729	779	829	879	929	979	1029
M	0.5	1	1	2	2	3	3	4	4	5	5	6	6	7	7	8
N	6	6	6	8	8	10	10	12	12	14	14	16	16	18	18	20
T	50	50	100	50	100	50	100	50	100	50	100	50	100	50	100	50
Mass (Kg)	**2.60**	**3.10**	**3.60**	**4.10**	**4.60**	**5.10**	**5.60**	**6.10**	**6.60**	**7.10**	**7.60**	**8.10**	**8.60**	**9.10**	**9.60**	**10.1**

Unit： mm Mass without motor (±10%).

(*) Specification subject to change without notices.

TSB80-LN

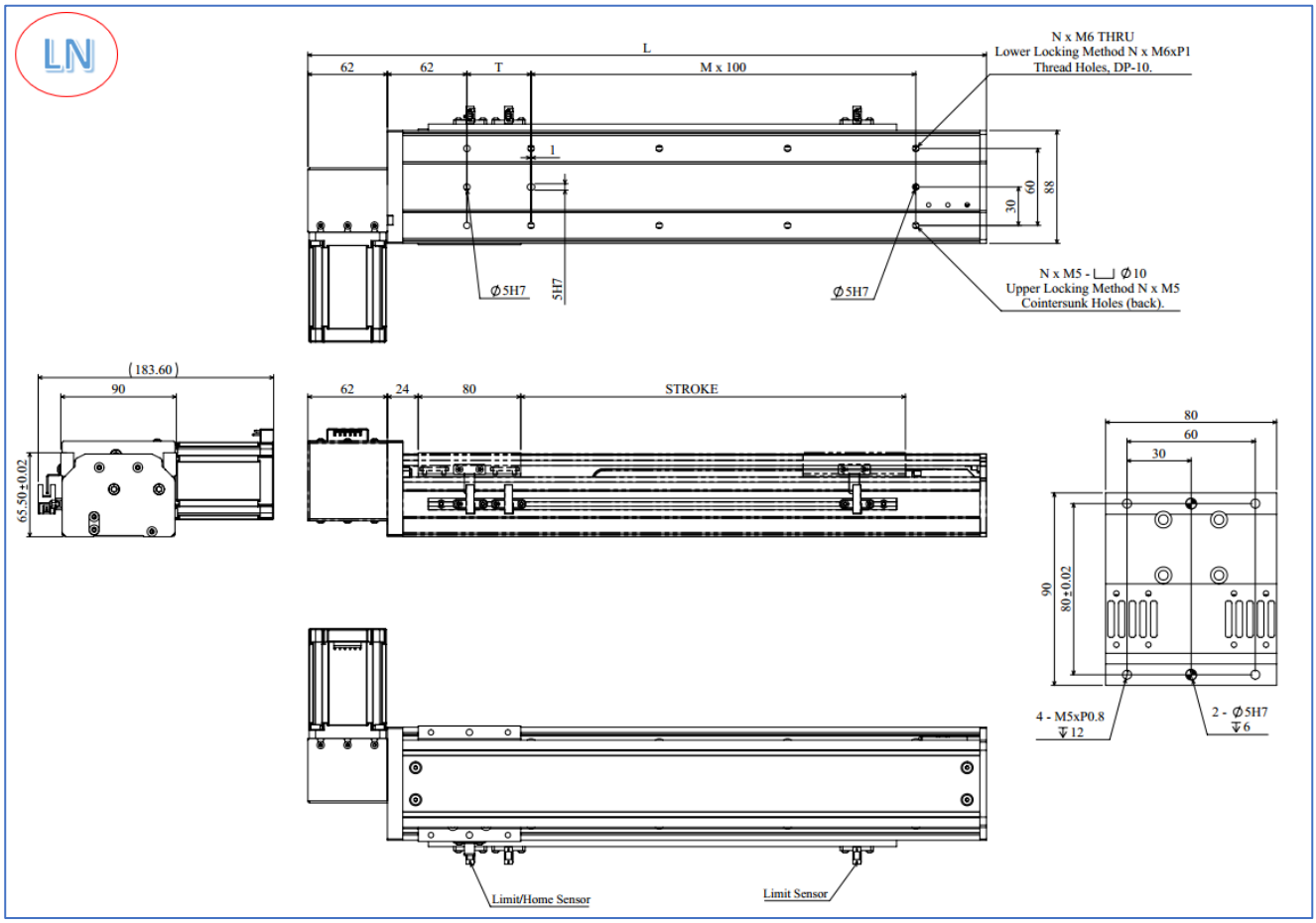

STROKE	50	100	150	200	250	300	350	400	450	500	550	600	650	700	750	800
L	279	329	379	429	479	529	579	629	679	729	779	829	879	929	979	1029
M	0.5	1	1	2	2	3	3	4	4	5	5	6	6	7	7	8
N	6	6	6	8	8	10	10	12	12	14	14	16	16	18	18	20
T	50	50	100	50	100	50	100	50	100	50	100	50	100	50	100	50
Mass (Kg)	**2.60**	**3.10**	**3.60**	**4.10**	**4.60**	**5.10**	**5.60**	**6.10**	**6.60**	**7.10**	**7.60**	**8.10**	**8.60**	**9.10**	**9.60**	**10.1**

Unit： mm Mass without motor (±10%).

(*) Specification subject to change without notices.

MUTIPLE ACTUATORS

PRODUTCT SELECTION

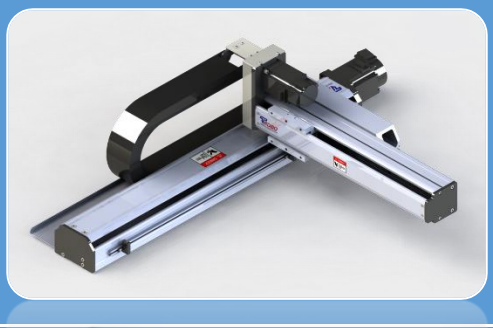

TM20

Maximum Stroke	X: 800mm Y: 350mm
Maximum Payload	5 KG
Body With	TS80: 80mm TS60: 60mm

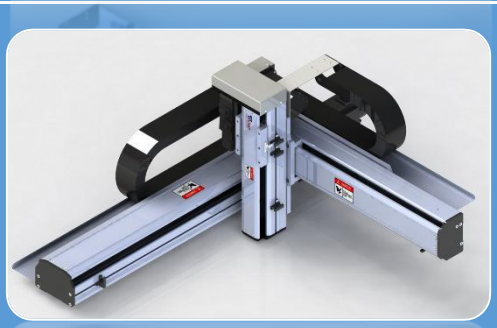

TM31

Maximum Stroke	X: 800 mm Y: 350 mm Z: 250 mm
Maximum Payload	5 KG
Body With	TS100: 100 mm TS80: 80 mm TS60: 60 mm

TM32

Maximum Stroke	X: 1000 mm Y: 400 mm Z: 250 mm
Maximum Payload	6 KG
Body With	TS120: 120 mm TS100: 100 mm TS80: 80 mm

TM33

Maximum Stroke	X: 1000 mm Y: 500 mm Z: 300 mm
Maximum Payload	12 KG
Body With	TS140: 140 mm TS120: 120 mm TS100: 100 mm

TM20 MODEL

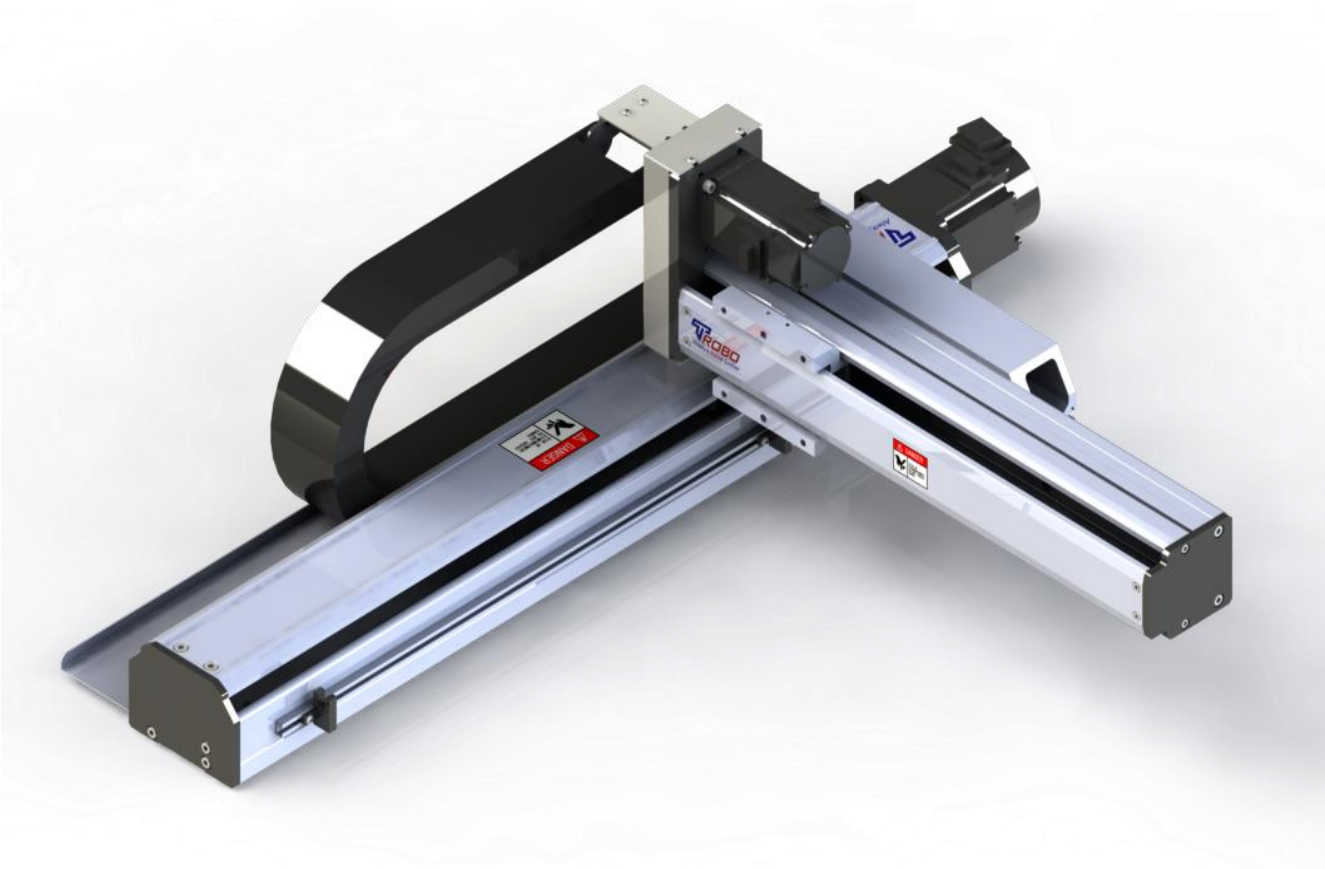

Maximum Stroke	
X axis	800mm
Y axis	300mm

Maximum Speed	
X axis	1000mm/s
Y axis	500mm/s

Maximum Motor Power	
X axis	200W
Y axis	100W

	X axis	Y axis
Axis Construction	TS80	TS60
Repeatability (mm)	± 0.01 (C7)	± 0.01 (C7)
Ball Screw Lead (mm)	20	10
Maximum Speed (mm/s)	1000	500
Stroke	200-800	100-250
Servo Moto Power (W)	200W	100W

Y Stroke (mm)	100	150	200	250
Y Payload (kg)	5	4.5	3.5	2.5

● Ordering Method

TM20 - A1 - 600 SN - 200 SN - M - S

Model	Combination direction	X Stroke	Y Stroke	Motor Position	Motor type	Package
TM20	A1	600	200	SN	M	S

Model

Combination direction

A1	*Left X axis base fixed and Y axis forward direction.*
A2	*Left X axis base fixed and Y axis reverse direction.*
A3	*Right X axis base fixed and Y axis forward direction.*
A4	*Right X axis base fixed and Y axis reverse direction.*

X Stroke

200-800
interval/50mm

Y Stroke

100-250
interval/50mm

Motor Position

SN	*Motor Exposed.*
LN	*Motor on Left Side.*
RN	*Motor on Right Side (X axis available).*

Motor type

M	*Mitsubishi*
P	*Panasonic*
D	*Delta*

For Z: Motor from customer

Package

K	*By Kit*
S	*By Set*

● Combination Direction

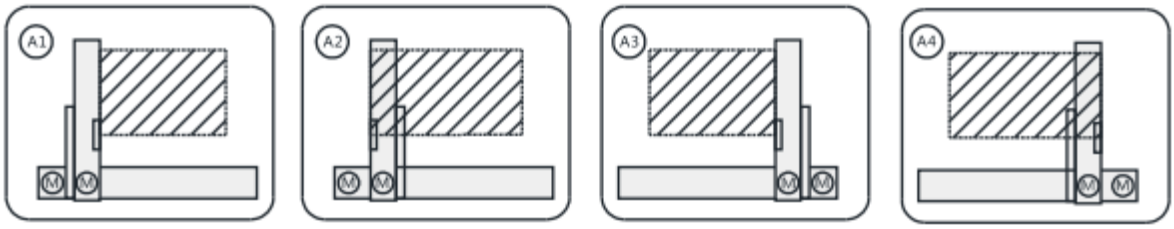

Example	
Order code	**TM20-A1-600SN-200SN-M-S**
Description	Multiple actuators model TM20; Left X axis base fixed and Y axis forward direction with supporting axis; X stroke 600mm - motor exposed, Y stroke 200 – motor exposed; motor brand Mitsubishi; package and delivery by set

TM20 - A1

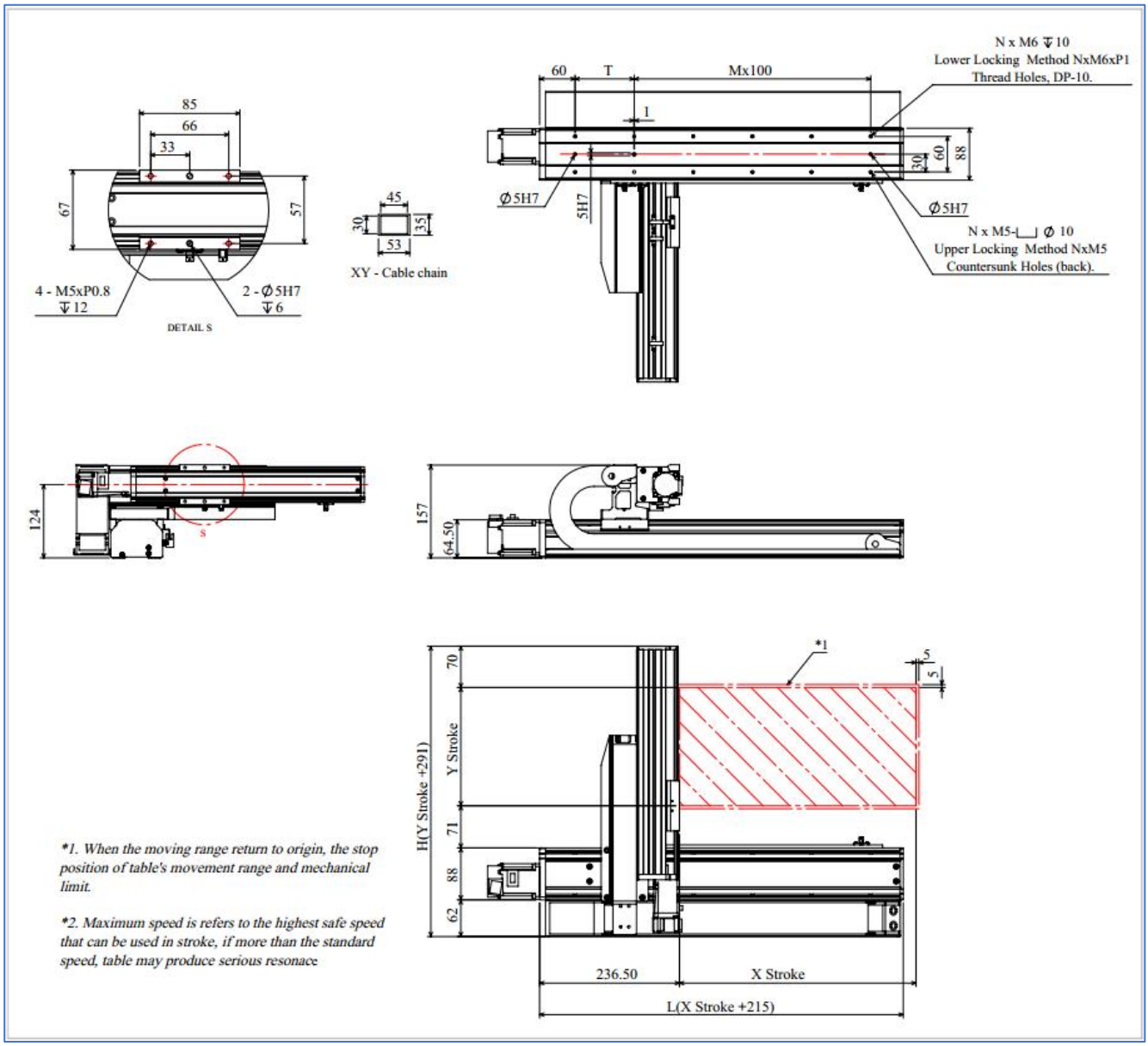

X STROKE	200	250	300	350	400	450	500	550	600	650	700	800
L	415	465	515	565	615	665	715	765	815	865	915	965
M	2	3	3	4	4	5	5	6	6	7	7	8
N	8	10	10	12	12	14	14	16	16	18	18	20
T	100	50	100	50	100	50	100	50	100	50	100	50

Y STROKE	100	150	200	250
H	391	441	491	541

TM31 MODEL

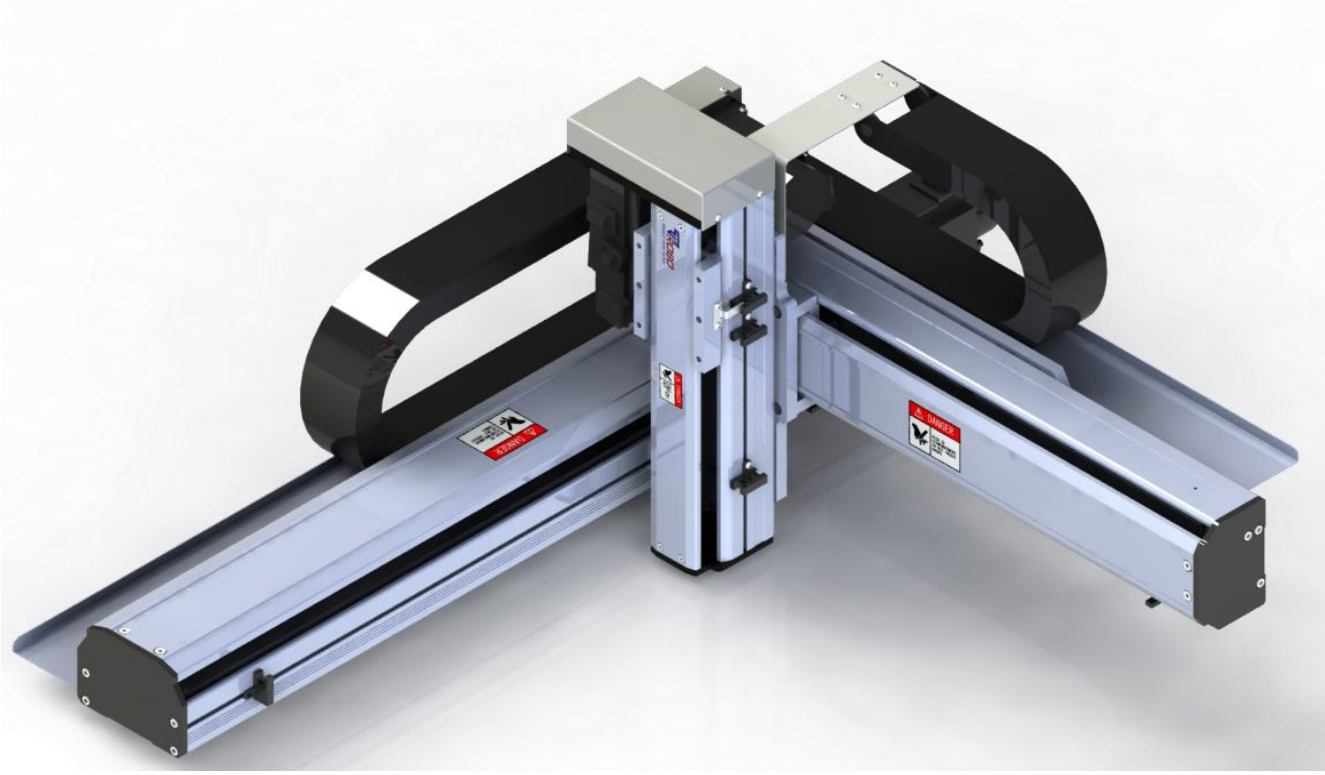

Maximum Stroke	
X axis	800mm
Y axis	300mm
Z axis	250mm

Maximum Speed	
X axis	1000mm/s
Y axis	1000mm/s
Z axis	500mm/s

Maximum Motor Power	
X axis	400W
Y axis	200W
Z axis	100W with Brake

	X axis	Y axis	Z axis
Axis Construction	*TS100*	*TS80*	*TS60*
Repeatability (mm)	*± 0.01 (C7)*	*± 0.01 (C7)*	*± 0.01 (C7)*
Ball Screw Lead (mm)	*20*	*20*	*10*
Maximum Speed (mm/s)	*1000*	*1000*	*500*
Stroke	*200-800*	*100-300*	*100-250*
Servo Motor Power (W)	400W	200W	100W Brake

	Y Stroke (mm)				
Z Stroke Maximum Payload (*)	100	150	200	250	300
100	*5 kg*	*4 kg*	*3 kg*	*2.5 kg*	*2 kg*
150	*5 kg*	*4 kg*	*3 kg*	*2.5 kg*	*2 kg*
200	*5 kg*	*3.5 kg*	*2.5 kg*	*2kg*	*1.5 kg*
250	*4 kg*	*3 kg*	*2 kg*	*1.5 kg*	*1 kg*

(*) This payload applies to configurations without axis support.

● Ordering Method

TM31 - A1 - G - 500 SN - 250 SN - 100 RN - M - S

Model

Combination direction

A1	*Left X axis base fixed and Y axis forward direction.*
A2	*Left X axis base fixed and Y axis reverse direction.*
A3	*Right X axis base fixed and Y axis forward direction.*
A4	*Right X axis base fixed and Y axis reverse direction.*

X Stroke

200-800
interval/50mm

Y Stroke

100-300
interval/50mm

Z Stroke

100-250
interval/50mm

Support axis Configuration

-	*No axis Support.*
G	*Axis Support.*

Motor Position

SN	*Motor Exposed.*
LN	*Motor on Left Side.*
RN	*Motor on Right Side (X, Z axis available).*

Motor type

M	*Mitsubishi*
P	*Panasonic*
D	*Delta*

For Z: Motor from customer

Package

K	*By Kit*
S	*By Set*

● Combination Direction

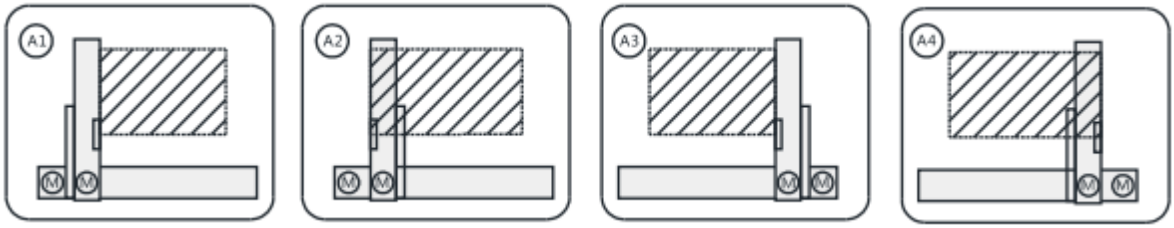

Example	
Order code	**TM31-A1-G-500SN-250SN-100SN-M-S**
Description	Multiple actuators model TM31; Left X axis base fixed and Y axis forward direction with supporting axis; X stroke 500mm - motor exposed, Y stroke 250 – motor exposed, Z stroke 100 – motor exposed; motor brand Mitsubishi; package and delivery by set.

TM31 - A1

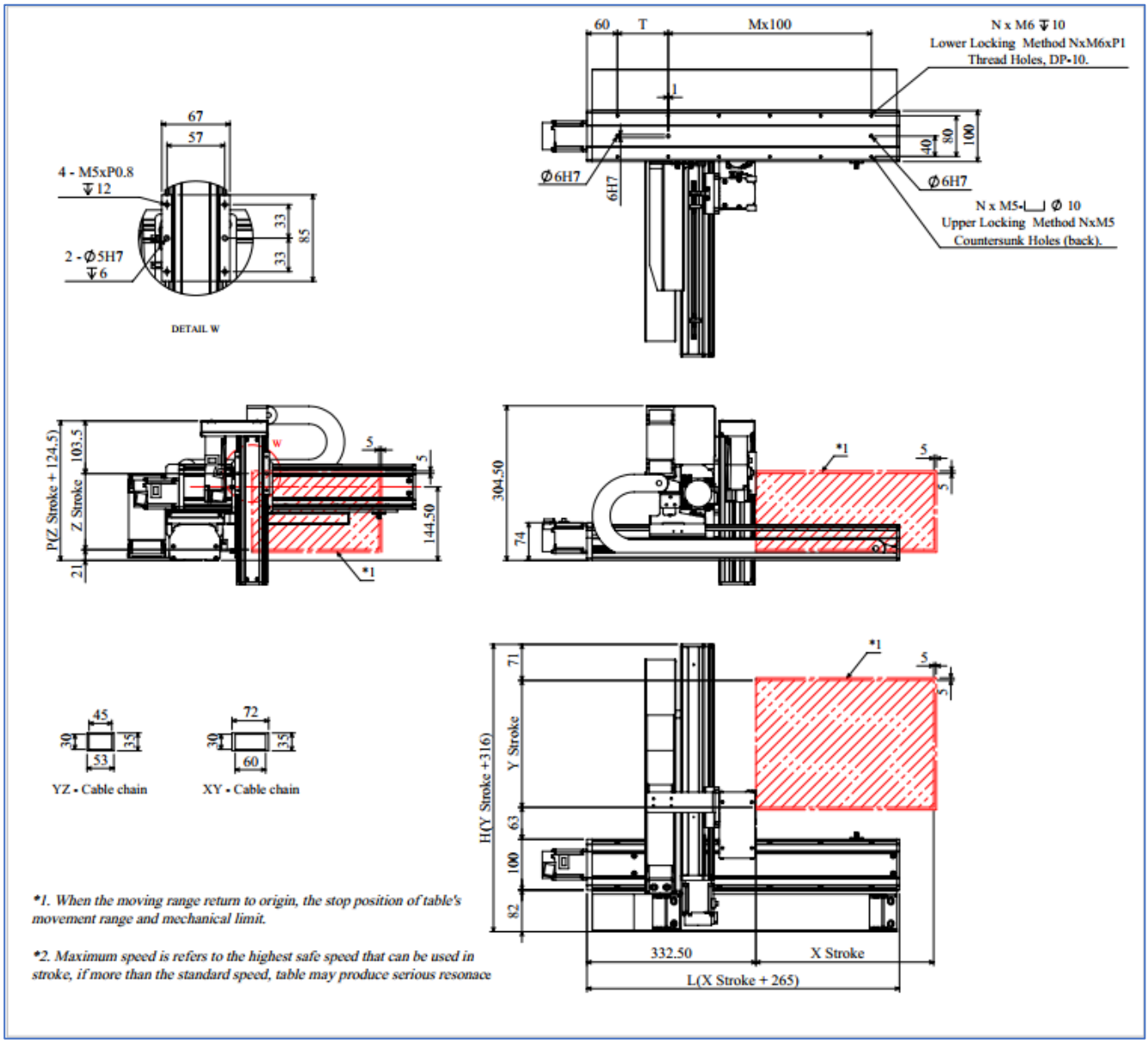

*1. When the moving range return to origin, the stop position of table's movement range and mechanical limit.

*2. Maximum speed is refers to the highest safe speed that can be used in stroke, if more than the standard speed, table may produce serious resonace

X STROKE	200	250	300	350	400	450	500	550	600	650	700	750	800
L	465	515	565	615	665	715	765	815	865	915	965	1015	1065
M	3	3	4	4	5	5	6	6	7	7	8	8	9
N	10	10	12	12	14	14	16	16	18	18	20	20	22
T	50	100	50	100	50	100	50	100	50	100	50	100	50

Y STROKE	100	150	200	250	300
H	416	466	516	566	616

Z STROKE	100	150	200	250
P	224.5	274.5	334.5	374.5

TM31 - A1 - G

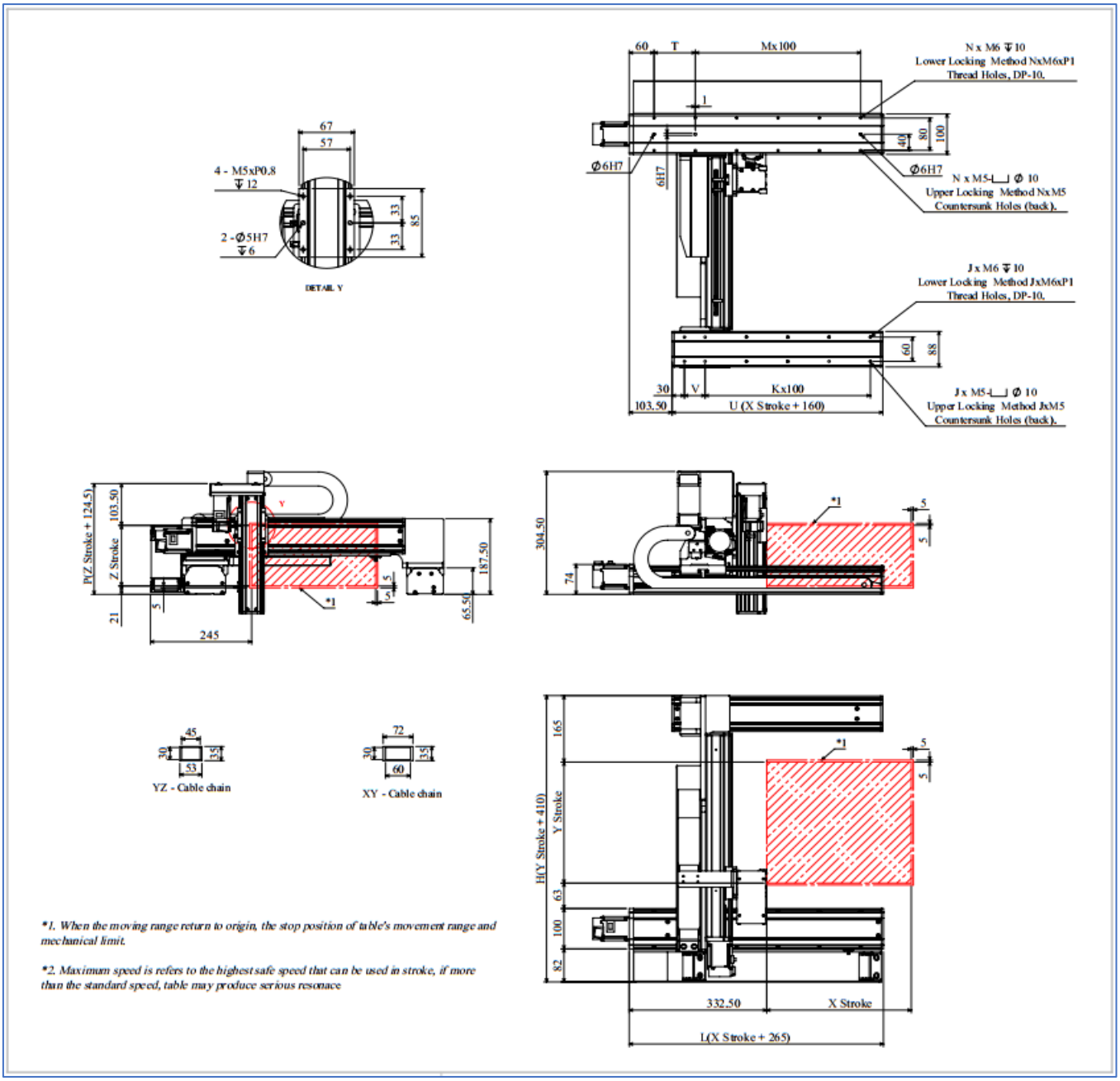

X STROKE	200	250	300	350	400	450	500	550	600	650	700	750	800
L	465	515	565	615	665	715	765	815	865	915	965	1015	1065
M	3	3	4	4	5	5	6	6	7	7	8	8	9
N	10	10	12	12	14	14	16	16	18	18	20	20	22
T	50	100	50	100	50	100	50	100	50	100	50	100	50
U	360	410	460	510	560	610	660	710	760	810	860	910	960
K	2	3	3	4	4	5	5	6	6	7	7	8	8
J	**8**	**10**	**10**	**12**	**12**	**14**	**14**	**16**	**16**	**18**	**18**	**20**	20
V	100	50	100	50	100	50	100	50	100	50	100	50	100

Y STROKE	250	300	350	400	450	500
H	660	710	760	810	860	910

Z STROKE	100	150	200	250
P	224.5	274.5	334.5	374.5

TM32 MODEL

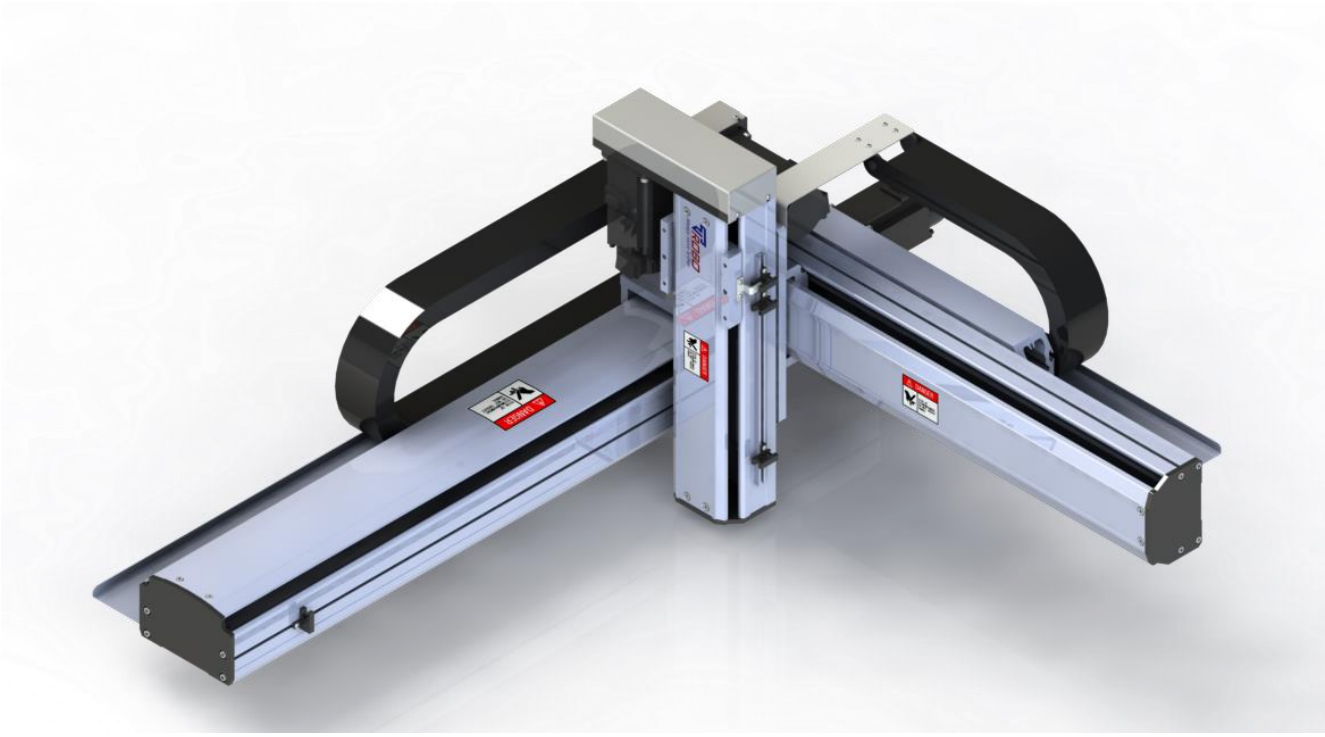

Maximum Stroke	
X axis	1000mm
Y axis	400mm
Z axis	250mm

Maximum Speed	
X axis	1000mm/s
Y axis	1000mm/s
Z axis	500mm/s

Maximum Motor Power	
X axis	400W
Y axis	400W
Z axis	200W with Brake

	X axis	Y axis	Z axis
Axis Construction	*TS120*	*TS100*	*TS80*
Repeatability (mm)	*± 0.01 (C7)*	*± 0.01 (C7)*	*± 0.01 (C7)*
Ball Screw Lead (mm)	*20*	*20*	*10*
Maximum Speed (mm/s)	*1000*	*1000*	*500*
Stroke	*200-1000*	*100-400*	*100-250*
Servo Moto Power (W)	400W	400W	200W Brake

Y Stroke (mm)				
Z Stroke Maximum Payload	100	200	300	400
100	*6 kg*	*5 kg*	*3.5 kg*	*2 kg*
150	*6 kg*	*5 kg*	*3.5 kg*	*2 kg*
200	*6 kg*	*4 kg*	*3 kg*	*1.5 kg*
250	*5 kg*	*3 kg*	*2.5 kg*	*1 kg*
(*) This payload applies to configurations without axis support.				

● Ordering Method

TM32 - A1 - G - 550 SN - 350 SN - 150 RN - M - S

Model

Combination direction

A1	*Left X axis base fixed and Y axis forward direction.*
A2	*Left X axis base fixed and Y axis reverse direction.*
A3	*Right X axis base fixed and Y axis forward direction.*
A4	*Right X axis base fixed and Y axis reverse direction.*

Support axis Configuration

-	*No axis Support*
G	*Axis Support*

X Stroke

200-1000
interval/50mm

Y Stroke

100-400
interval/50mm

Z Stroke

100-250
interval/50mm

Motor Position

SN	*Motor Exposed.*
LN	*Motor on Left Side.*
RN	*Motor on Right Side (X, Z axis available).*

Motor type

M	*Mitsubishi*
P	*Panasonic*
D	*Delta*

For Z: Motor from customer

Package

K	*By Kit*
S	*By Set*

● Combination Direction

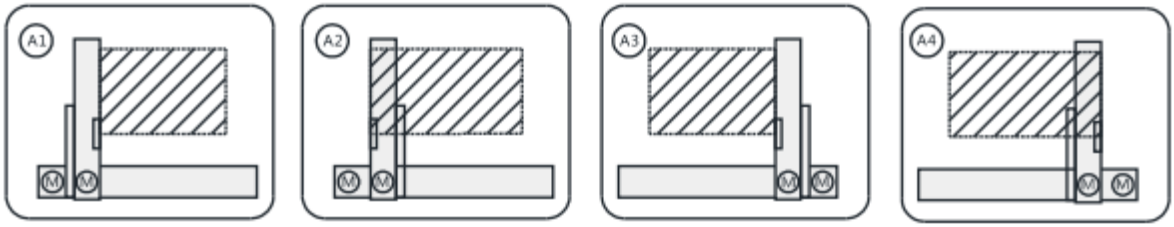

Example	
Order code	**TM32-A1-G-550SN-350SN-150SN-M-S**
Description	Multiple actuators model TM32; Left X axis base fixed and Y axis forward direction with supporting axis; X stroke 550mm - motor exposed, Y stroke 350 – motor exposed, Z stroke 150 – motor exposed; motor brand Mitsubishi; package and delivery by set.

TM32 - A1

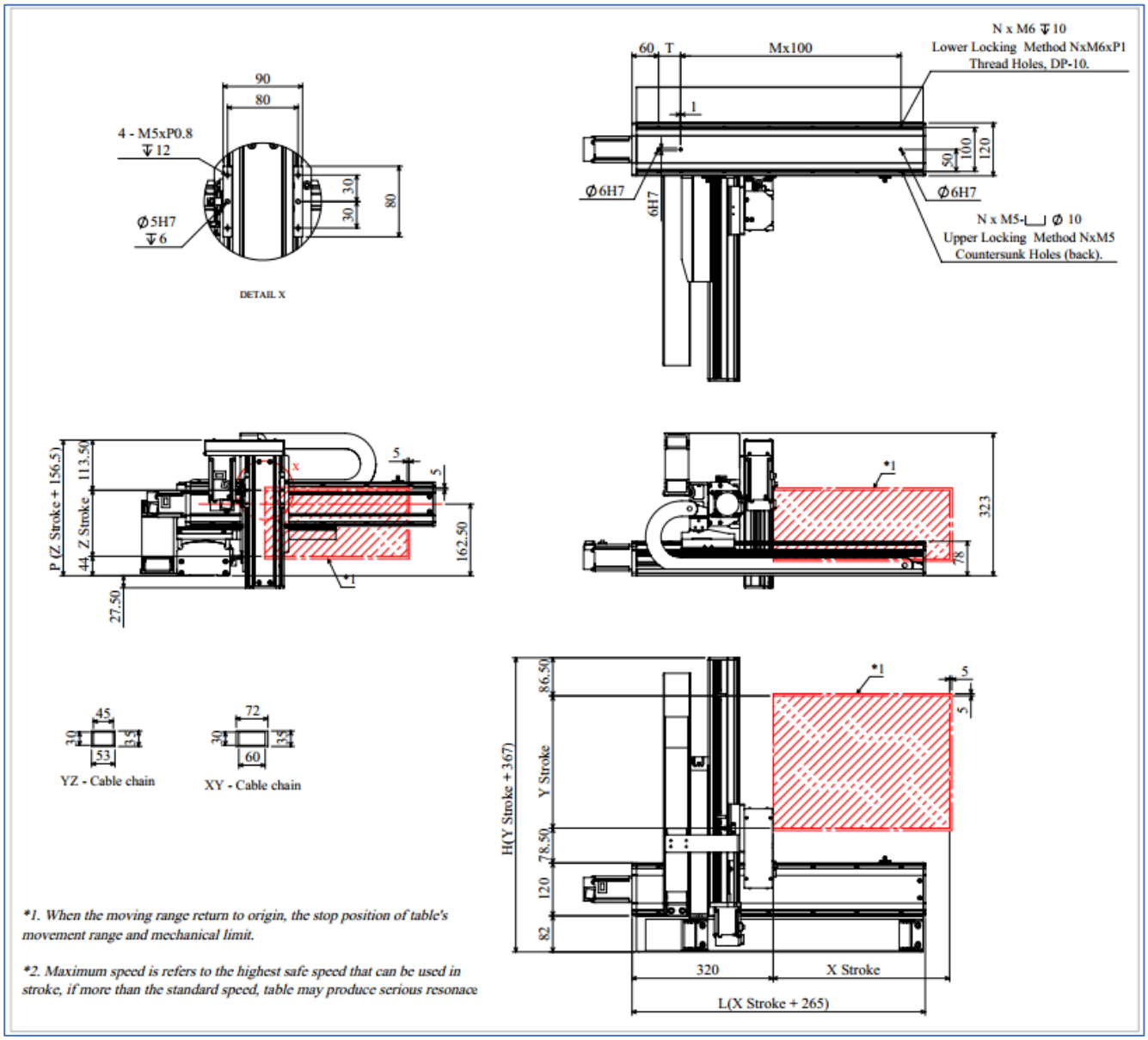

*1. When the moving range return to origin, the stop position of table's movement range and mechanical limit.

*2. Maximum speed is refers to the highest safe speed that can be used in stroke, if more than the standard speed, table may produce serious resonace

X STROKE	200	250	300	350	400	450	500	550	600	650	700	750	800
L	465	515	565	615	665	715	765	815	865	915	965	1015	1065
M	3	3	4	4	5	5	6	6	7	7	8	8	9
N	10	10	12	12	14	14	16	16	18	18	20	20	22
T	50	100	50	100	50	100	50	100	50	100	50	100	50

X STROKE	850	900	950	1000
L	1115	1165	1215	1265
M	9	10	10	11
N	22	24	24	26
T	100	50	100	50

Y STROKE	100	150	200	250	300	350	400
H	467	517	567	617	667	717	767

Z STROKE	100	150	200	250
P	256.5	306.5	356.5	406.5

TM32 - A1 - G

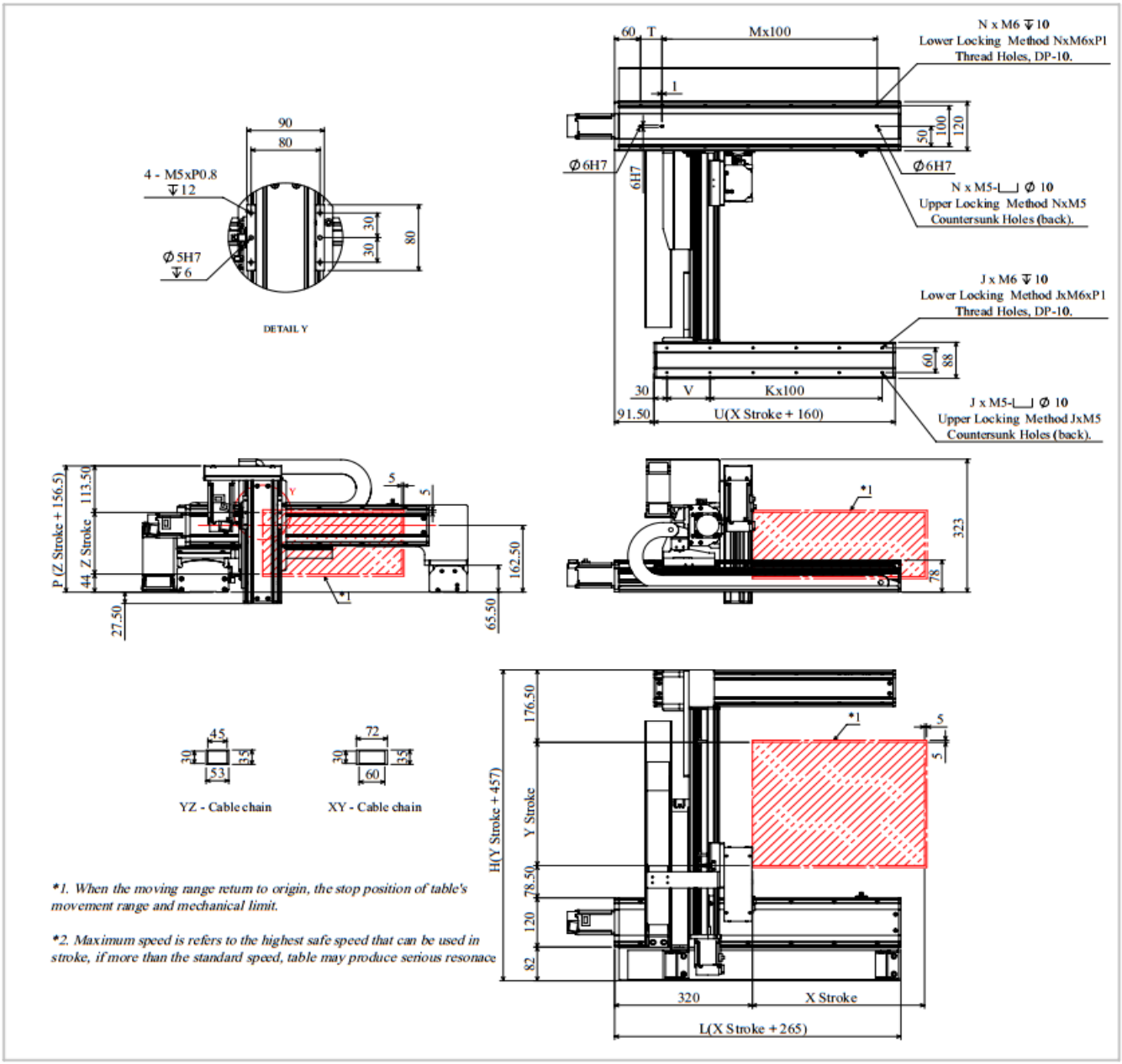

*1. When the moving range return to origin, the stop position of table's movement range and mechanical limit.

*2. Maximum speed is refers to the highest safe speed that can be used in stroke, if more than the standard speed, table may produce serious resonace

X STROKE	200	250	300	350	400	450	500	550	600	650	700	750	800	850	900	950	1000
L	465	515	565	615	665	715	765	815	865	915	965	1015	1065	1115	1165	1215	1265
M	3	3	4	4	5	5	6	6	7	7	8	8	9	9	10	10	11
N	10	10	12	12	14	14	16	16	18	18	20	20	22	22	24	24	26
T	50	100	50	100	50	100	50	100	50	100	50	100	50	100	50	100	50
U	360	410	460	510	560	610	660	710	760	810	860	910	960	1010	1060	1110	1160
K	2	3	3	4	4	5	5	6	6	7	7	8	8	9	9	10	10
J	8	10	10	12	12	14	14	16	16	18	18	20	20	22	22	24	24
V	100	50	100	50	100	50	100	50	100	50	100	50	100	50	100	50	100

Y STROKE	300	350	400	450	500	550	600
H	757	807	857	907	957	1007	1057

Z STROKE	100	150	200	250
P	256.5	306.5	356.5	406.5

TM33 MODEL

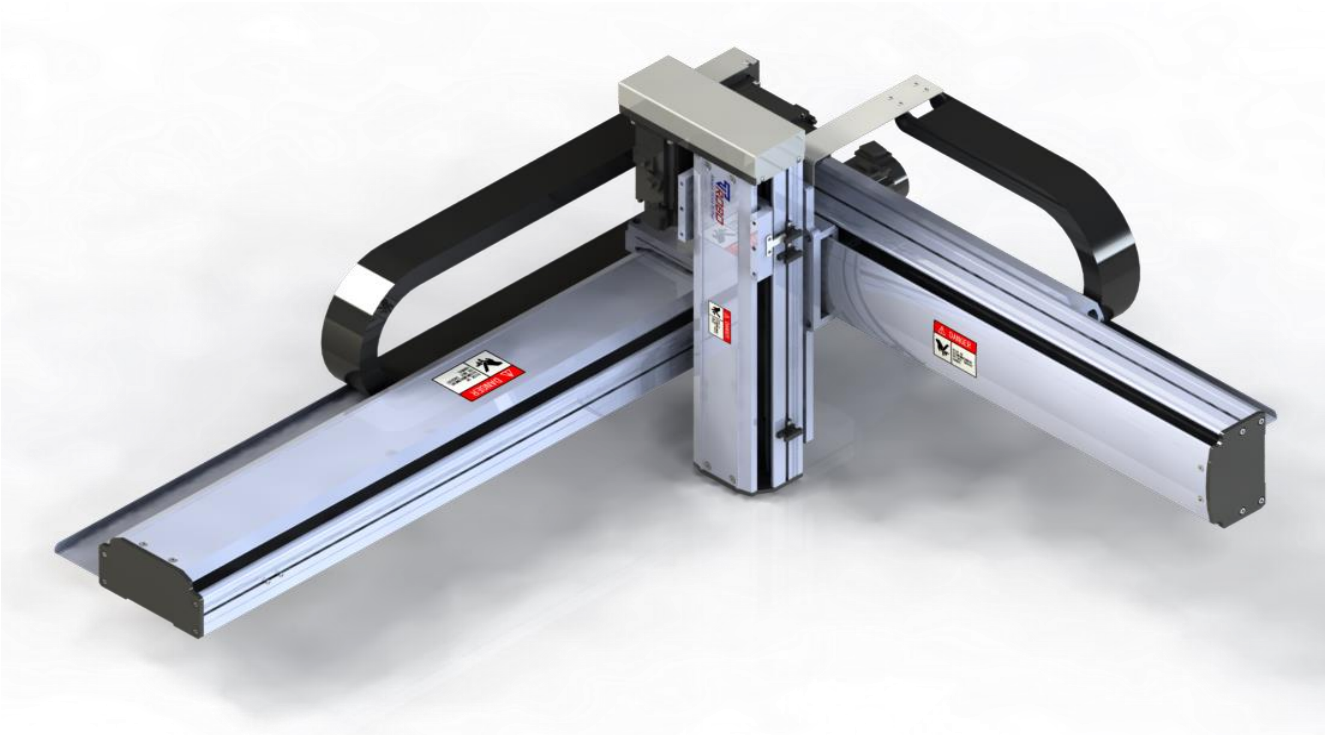

Maximum Stroke	
X axis	1000mm
Y axis	500mm
Z axis	300mm

Maximum Speed	
X axis	1000mm/s
Y axis	1000mm/s
Z axis	500mm/s

Maximum Motor Power	
X axis	400W
Y axis	400W
Z axis	200Wwith Brake

	X axis	Y axis	Z axis
Axis Construction	*TS140*	*TS120*	*TS100*
Repeatability (mm)	*± 0.01 (C7)*	*± 0.01 (C7)*	*± 0.01 (C7)*
Ball Screw Lead (mm)	*20*	*20*	*10*
Maximum Speed (mm/s)	*1000*	*1000*	*500*
Stroke	*200-1000*	*100-500*	*100-300*
Servo Moto Power (W)	400W	400W	200W Brake

Y Stroke (mm)					
Z Stroke Maximum Payload	100	200	300	400	500
100	*12 kg*	*10 kg*	*7.5 kg*	*4.5 kg*	*2.5 kg*
150	*12 kg*	*10 kg*	*7.5 kg*	*4.5kg*	*2.5 kg*
200	*12 kg*	*9 kg*	*7 kg*	*3.5 kg*	*2 kg*
250	*11 kg*	*8.5 kg*	*6.5 kg*	*3 kg*	*1.5 kg*
300	*10 kg*	*8 kg*	*6 kg*	*2.5 kg*	*1 kg*

(*) This payload applies to configurations without axis support.

● Ordering Method

TM33 - A1 - G - 750 SN - 350 SN - 150 RN - M - S

Model

Combination direction

A1	*Left X axis base fixed and Y axis forward direction.*
A2	*Left X axis base fixed and Y axis reverse direction.*
A3	*Right X axis base fixed and Y axis forward direction.*
A4	*Right X axis base fixed and Y axis reverse direction.*

Support axis Configuration

-	*No axis Support*
G	*Axis Support*

X Stroke	Y Stroke	Z Stroke
200-1000	100-500	100-300
interval/50mm	*interval/50mm*	*interval/50mm*

Motor Position

SN	*Motor Exposed.*
LN	*Motor on Left Side.*
RN	*Motor on Right Side (X, Z axis available).*

Motor type

M	*Mitsubishi*
P	*Panasonic*
D	*Delta*

For Z: Motor from customer

Package

K	*By Kit*
S	*By Set*

● Combination Direction

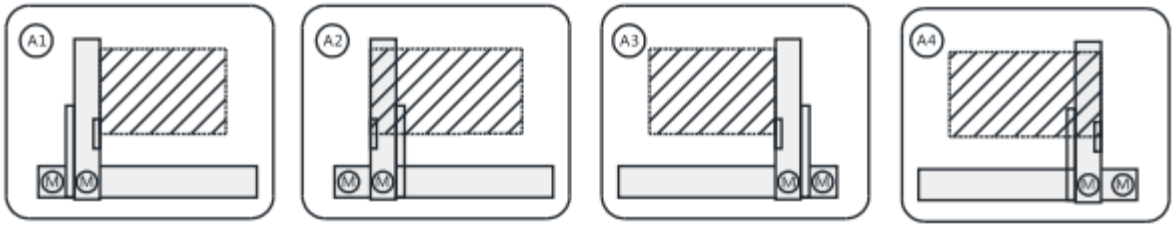

Example	
Order code	**TM33-A1-G-750SN-350SN-150SN-M-S**
Description	Multiple actuators model TM33; Left X axis base fixed and Y axis forward direction with supporting axis; X stroke 750mm - motor exposed, Y stroke 350 – motor exposed, Z stroke 150 – motor exposed; motor brand Mitsubishi; package and delivery by set.

TM33 - A1

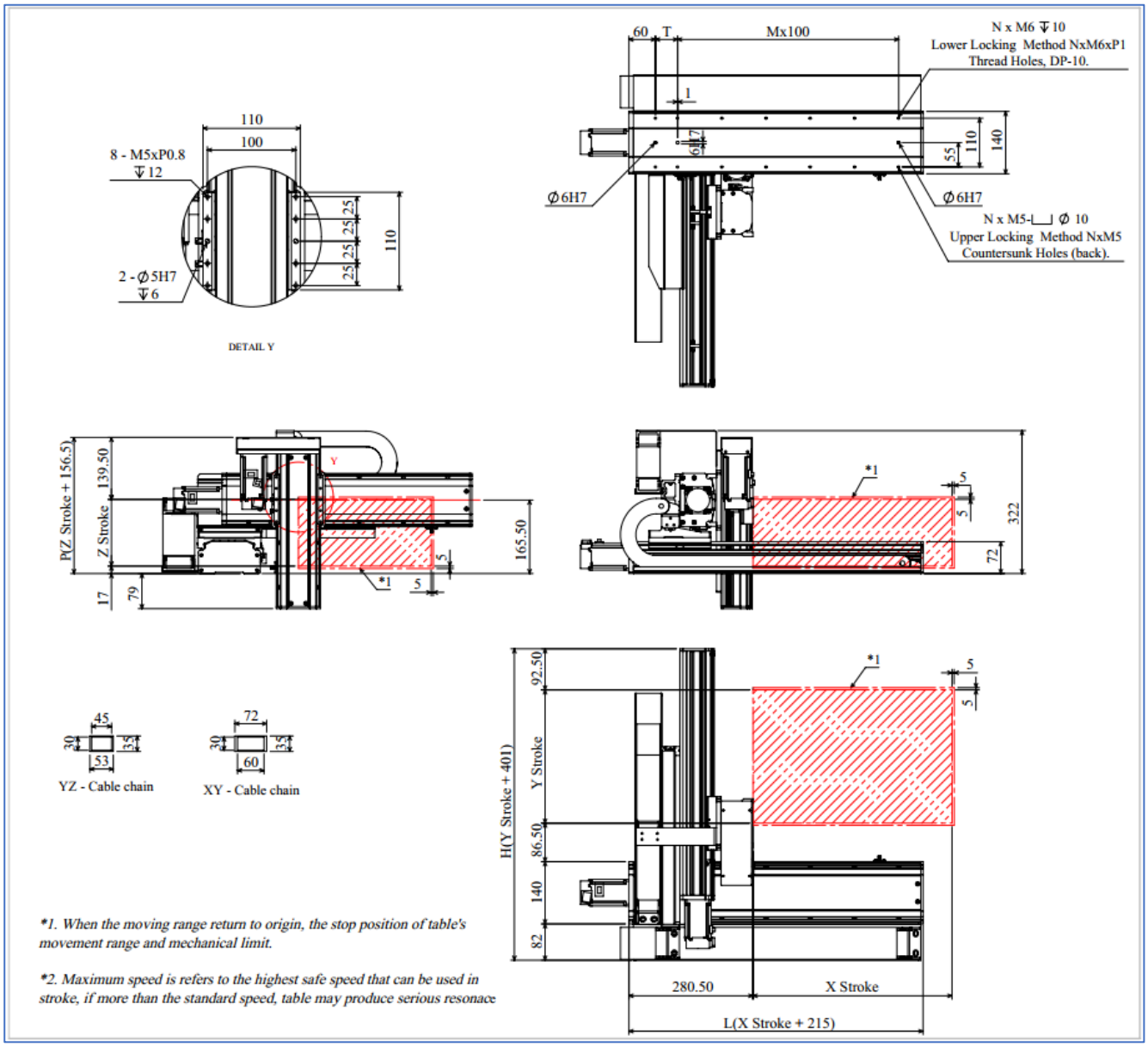

*1. When the moving range return to origin, the stop position of table's movement range and mechanical limit.

*2. Maximum speed is refers to the highest safe speed that can be used in stroke, if more than the standard speed, table may produce serious resonace

X STROKE	200	250	300	350	400	450	500	550	600	650	700	750	800	850
L	415	465	515	565	615	665	715	765	815	865	915	965	1015	1065
M	2	3	3	4	4	5	5	6	6	7	7	8	8	9
N	8	10	10	12	12	14	14	16	16	18	18	20	20	22
T	100	50	100	50	100	50	100	50	100	50	100	50	100	50

X STROKE	900	950	1000
L	1115	1165	1215
M	9	10	10
N	22	24	24
T	100	50	100

Y STROKE	100	150	200	250	300	350	400	450	500
H	501	551	601	651	701	751	801	851	901

Z STROKE	100	150	200	250	300
P	256.5	306.5	356.5	406.5	456.5

TM33 - A1 - G

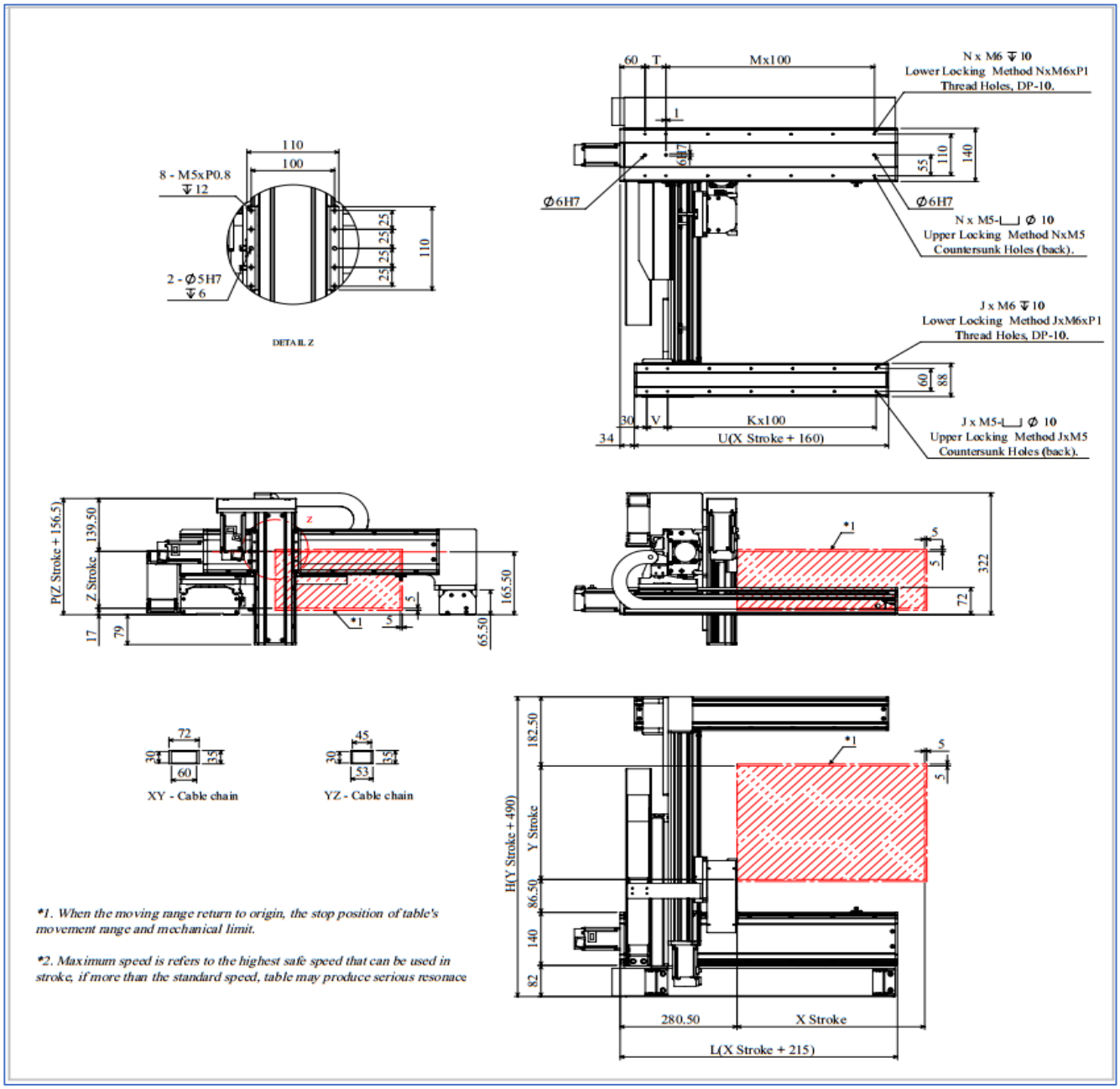

1. When the moving range return to origin, the stop position of table's movement range and mechanical limit.

2. Maximum speed is refers to the highest safe speed that can be used in stroke, if more than the standard speed, table may produce serious resonace

X STROKE	200	250	300	350	400	450	500	550	600	650	700	750	800	850	900	950	1000
L	415	465	515	565	615	665	715	765	815	865	915	965	1015	1065	1115	1165	1215
M	2	3	3	4	4	5	5	6	6	7	7	8	8	9	9	10	10
N	8	10	10	12	12	14	14	16	16	18	18	20	20	22	22	24	24
T	100	50	100	50	100	50	100	50	100	50	100	50	100	50	100	50	100
U	360	410	460	510	560	610	660	710	760	810	860	910	960	1010	1060	1110	1160
K	2	3	3	4	4	5	5	6	6	7	7	8	8	9	9	10	10
J	8	10	10	12	12	14	14	16	16	18	18	20	20	22	22	24	24
V	100	50	100	50	100	50	100	50	100	50	100	50	100	50	100	50	100

Y STROKE	300	350	400	450	500	550	600
H	790	840	890	940	990	1040	1090

Z STROKE	100	150	200	250	300
P	256.5	306.5	356.5	406.5	456.5

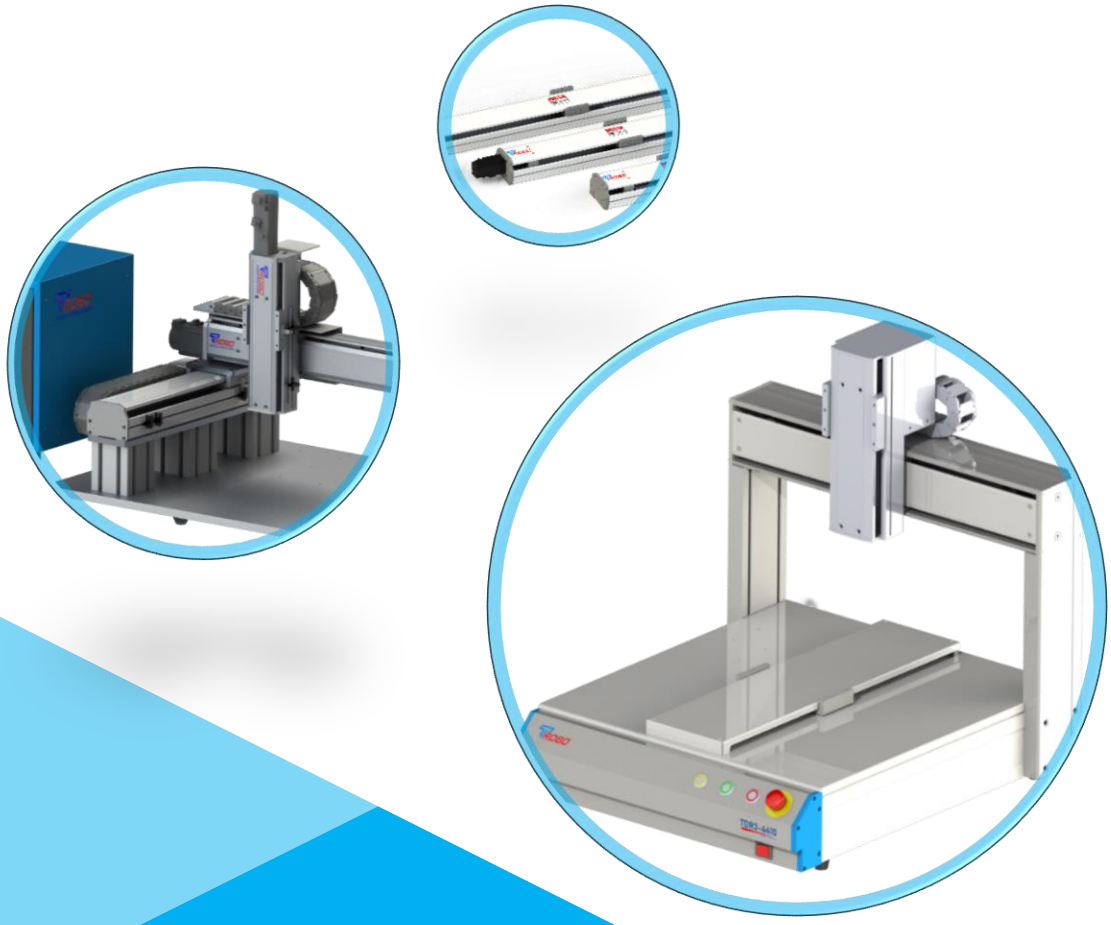

TRI CUONG INDUSTRIAL COMPANY

Factory: Km 16+800, National Highway 3, Nguyen Khe Automotive Industrial Zone, Nguyen Khe, Dong Anh Dist., Hanoi, Vietnam

Phone:	(+84) 432959859	Fax:	(+84) 432959856
Mobile:	(+84) 985118979	-	(+84) 983371269
Email:	sales.01@tci.vn	-	binhdt@tci.vn